5. SAMPLE DHHL CONTRACT

STATE OF HAWAII

CONTRACT FOR GOODS OR SERVICES
BASED UPON
COMPETITIVE SEALED BIDS

This Contract, executed on the respective dates indicated below, is effective as of _____, _____, between Department of Hawaiian Home Lands,
(Insert name of state department, agency, board or commission)
State of Hawaii ("STATE"), by its Chairman, Hawaiian Homes Commission,
(Insert title of person signing for State)
(hereafter also referred to as the HEAD OF THE PURCHASING AGENCY or designee ("HOPA")), whose address is 91-5420 Kapolei Parkway, Kapolei, Hawaii 96707
_____ and _____
("CONTRACTOR"), a _____
(Insert corporation, partnership, joint venture, sole proprietorship. or other legal form of the Contractor)
under the laws of the State of Hawaii, whose business address and federal and state taxpayer identification numbers are as follows: _____
_____

RECITALS

A. The STATE desires to retain and engage the CONTRACTOR to provide the goods or services, or both, described in this Contract and its attachments, and the CONTRACTOR is agreeable to providing said goods or services, or both.

B. The STATE has issued an invitation for competitive sealed bids, and has received and reviewed bids submitted in response to the invitation.

C. The solicitation for bids and the selection of the CONTRACTOR were made in accordance with section 103D-302, Hawaii Revised Statutes ("HRS"), Hawaii Administrative Rules, Title 3, Department of Accounting and General Services, Subtitle 11 ("HAR"), Chapter 122, Subchapter 5, and applicable procedures established by the appropriate Chief Procurement Officer ("CPO").

D. The CONTRACTOR has been identified as the lowest responsible and responsive bidder whose bid meets the requirements and criteria set forth in the invitation.

E. Pursuant to HHCA of 1920, the STATE
(Legal authority to enter into this Contract)
is authorized to enter into this Contract.

F. Money is available to fund this Contract pursuant to:

(1) Hawaiian Homes Trust Fund
(Identify state sources)
or (2) NAHASDA - Housing Block Grant HI0001
(Identify federal sources)
or both, in the following amounts: State $ _____
Federal $ _____

NOW, THEREFORE, in consideration of the promises contained in this Contract, the STATE and the CONTRACTOR agree as follows:

1. Scope of Services. The CONTRACTOR shall, in a proper and satisfactory manner as determined by the STATE, provide all the goods or services, or both, set forth in the Invitation for Bids number IFB-18-HHL-007 ("IFB") and the CONTRACTOR'S accepted bid ("Bid"), both of which, even if not physically attached to this Contract, are made a part of this Contract.

2. Compensation. The CONTRACTOR shall be compensated for goods supplied or services performed, or both, under this Contract in a total amount not to exceed

_____ DOLLARS
($ _____), including approved costs incurred and taxes, at the time and in the manner set forth in the IFB and CONTRACTOR'S Bid.

3. Time of Performance. The services or goods required of the CONTRACTOR under this Contract shall be performed and completed in accordance with the Time of Performance set forth in Attachment-S3, which is made a part of this Contract.

4. Bonds. The CONTRACTOR ☑ is required to provide or ☐ is not required to provide: ☑ a performance bond, ☑ a payment bond, ☐ a performance and payment bond in the amount of _____ DOLLARS ($ _____).

5. Standards of Conduct Declaration. The Standards of Conduct Declaration of the CONTRACTOR is attached to and made a part of this Contract.

6. Other Terms and Conditions. The General Conditions and any Special Conditions are attached to and made a part of this Contract. In the event of a conflict between the General Conditions and the Special Conditions, the Special Conditions shall control. In the event of a conflict among the documents, the order of precedence shall be as follows: (1) this Contract, including all attachments and addenda; (2) the IFB, including all attachments and addenda; and (3) the CONTRACTOR'S Bid.

7. Liquidated Damages. Liquidated damages shall be assessed in the amount of ONE THOUSAND DOLLARS ($ 1,000.00) per day, in accordance with the terms of paragraph 9 of the General Conditions.

8. Notices. Any written notice required to be given by a party to this Contract shall be (a) delivered personally, or (b) sent by United States first class mail, postage prepaid. Notice to the STATE shall be sent to the HOPA'S address indicated in the Contract. Notice to the CONTRACTOR shall be sent to the CONTRACTOR'S address indicated in the Contract. A notice shall be deemed to have been received three (3) days after mailing or at the time of actual receipt, whichever is earlier. The CONTRACTOR is responsible for notifying the STATE in writing of any change of address.

IN VIEW OF THE ABOVE, the parties execute this Contract by their signatures, on the dates below, to be effective as of the date first above written.

STATE

_____
(Signature)

Jobie M. K. Masagatani
(Print Name)

Chairman, Hawaiian Homes Commission
(Print Title)

_____
(Date)

CONTRACTOR

CORPORATE SEAL
(If available)

_____
(Name of Contractor)

_____
(Signature)

_____
(Print Name)

_____ *
(Print Title)

_____
(Date)

APPROVED AS TO FORM:

_____
Deputy Attorney General

* Evidence of authority of the CONTRACTOR'S representative to sign this Contract for the CONTRACTOR must be attached.

STATE OF HAWAII

CONTRACTOR'S ACKNOWLEDGMENT

STATE OF HAWAII **)**
) SS.
CITY & **COUNTY OF** HONOLULU **)**

On this _____ day of _____, _____ before me appeared

_____ and _____, to me known, to be the person(s) described in and, who, being by me duly sworn, did say that he/she/they is/are

_____ and _____ of _____, the CONTRACTOR named in the foregoing instrument, and that he/she/they is/are authorized to sign said instrument on behalf of the CONTRACTOR, and acknowledges that he/she/they executed said instrument as the free act and deed of the CONTRACTOR.

_____
(Signature)

(Notary Stamp or Seal)

_____
(Print Name)

Notary Public, State of _____

My commission expires: _____

Doc. Date: _____ # Pages: _____

Notary Name: _____ _____ Circuit

Doc. Description: Contract for Goods or Services Based on Competitive Sealed Bids

(Notary Stamp or Seal)

_____

_____
Notary Signature Date

NOTARY CERTIFICATION

STATE OF HAWAII

CONTRACTOR'S STANDARDS OF CONDUCT DECLARATION

For the purposes of this declaration:

"Agency" means and includes the State, the legislature and its committees, all executive departments, boards, commissions, committees, bureaus, offices; and all independent commissions and other establishments of the state government but excluding the courts.

"Controlling interest" means an interest in a business or other undertaking which is sufficient in fact to control, whether the interest is greater or less than fifty per cent (50%).

"Employee" means any nominated, appointed, or elected officer or employee of the State, including members of boards, commissions, and committees, and employees under contract to the State or of the constitutional convention, but excluding legislators, delegates to the constitutional convention, justices, and judges. (Section 84-3, HRS).

On behalf of _____, CONTRACTOR, the undersigned does declare as follows:

1. CONTRACTOR ☐ is* ☒ is not a legislator or an employee or a business in which a legislator or an employee has a controlling interest. (Section 84-15(a), HRS).
2. CONTRACTOR has not been represented or assisted personally in the matter by an individual who has been an employee of the agency awarding this Contract within the preceding two years and who participated while so employed in the matter with which the Contract is directly concerned. (Section 84-15(b), HRS).
3. CONTRACTOR has not been assisted or represented by a legislator or employee for a fee or other compensation to obtain this Contract and will not be assisted or represented by a legislator or employee for a fee or other compensation in the performance of this Contract, if the legislator or employee had been involved in the development or award of the Contract. (Section 84-14 (d), HRS).
4. CONTRACTOR has not been represented on matters related to this Contract, for a fee or other consideration by an individual who, within the past twelve (12) months, has been an agency employee, or in the case of the Legislature, a legislator, and participated while an employee or legislator on matters related to this Contract. (Sections 84-18(b) and (c), HRS).

CONTRACTOR understands that the Contract to which this document is attached is voidable on behalf of the STATE if this Contract was entered into in violation of any provision of chapter 84, Hawaii Revised Statutes, commonly referred to as the Code of Ethics, including the provisions which are the source of the declarations above. Additionally, any fee, compensation, gift, or profit received by any person as a result of a violation of the Code of Ethics may be recovered by the STATE.

CONTRACTOR

By _____
(Signature)

Print Name _____

Print Title _____

Name of Contractor _____

Date _____

* Reminder to Agency: If the "is" block is checked and if the Contract involves goods or services of a value in excess of $10,000, the Contract must be awarded by competitive sealed bidding under section 103D-302, HRS, or a competitive sealed proposal under section 103D-303, HRS. Otherwise, the Agency may not award the Contract unless it posts a notice of its intent to award it and files a copy of the notice with the State Ethics Commission. (Section 84-15(a), HRS).

STATE OF HAWAII

SCOPE OF SERVICES

Project: **Anahola Farm Lots Water Project, Phase I – Water Line Replacement**
Location: **Anahola, Kauai, Hawaii (TMK: 4-8-005: 39; 4-8-018: 027; 4-8-021: 032)**
Contractor: **[TBD]**

Pursuant to 103D, Hawaii Revised Statutes, the CONTRACTOR shall perform and provide the Scope of Services listed below and detailed in Invitation for Bids IFB-18-HHL-007 and in CONTRACTOR'S Bid Offer submitted _____, 2018, in a proper and satisfactory manner as determined by the STATE and in accordance with all Federal, State and local laws, both of which are incorporated by reference.

The prices herein for the following items shall include all materials, labor, tools, equipment, machinery and all incidentals necessary, including excavation and backfill, to install and/or to construct these items in place complete and in accordance with the plans and specifications.

SCOPE OF SERVICES

I	Mobilization & Demobilization, BMPs, Traffic Control (Items 1 to 3, inclusive)
II	Waterline and Appurtenances (Items 4 to 81, inclusive)
III	Roadway Repaving (Item 82)
IV	Chlorination and Flushing (Item 83)
V	Guardrail and Fencing (Items 84 to 85, inclusive)
VI	Waterline Connection (Item 86)
VII	Archeological Monitoring (Item 87)
VIII	Geotechnical Monitoring (Item 88)
IX	Biological Monitoring (Item 89)
X	Unforeseen Site Conditions (Item 90)
XI	Imported Backfill Material (Additive Alternate Item 1)

STATE OF HAWAII

COMPENSATION AND PAYMENT SCHEDULE

Project: **Anahola Farm Lots Water Project, Phase I – Water Line Replacement**
Location: **Anahola, Kauai, Hawaii (TMK: 4-8-005: 39; 4-8-018: 027; 4-8-021: 032)**
Contractor: **[TBD]**

The State shall pay the CONTRACTOR a sum not to exceed **_____ AND __/100 DOLLARS ($_____)** for the satisfactory completion of the work under this contract.

COMPENSATION & PAYMENT SCHEDULE

I	Mobilization & Demobilization, BMPs, Traffic Control (Items 1 to 3, inclusive)
II	Waterline and Appurtenances (Items 4 to 81, inclusive)
III	Roadway Repaving (Item 82)
IV	Chlorination and Flushing (Item 83)
V	Guardrail and Fencing (Items 84 to 85, inclusive)
VI	Waterline Connection (Item 86)
VII	Archeological Monitoring (Item 87)
VIII	Geotechnical Monitoring (Item 88)
IX	Biological Monitoring (Item 89)
X	Unforeseen Site Conditions (Item 90)
XI	Imported Backfill Material (Additive Alternate Item 1)

STATE OF HAWAII

TIME OF PERFORMANCE

Project: **Anahola Farm Lots Water Project, Phase I – Water Line Replacement**
Location: **Anahola, Kauai, Hawaii (TMK: 4-8-005: 39; 4-8-018: 027; 4-8-021: 032)**
Contractor: **[TBD]**

1. The Time of Performance of this Contract shall be four hundred sixty (460) Calendar Days from the effective date specified in a written Notice to Proceed, subject to time extension(s) as may be granted at the sole discretion of the STATE, as documented in writing. The Notice to Proceed shall be issued by the STATE in a separate letter to the CONTRACTOR.

2. This Contract shall expire on the date on which the later of the following occurs:
   (a) The STATE makes final payment to the CONTRACTOR in accordance with:
      (1) paragraph 17(d) of the General Conditions (AG-008 103D General Conditions) and
      (2) there is no dispute between the parties hereto as to the Work or other obligations of the CONTRACTOR hereunder is outstanding, or
   (b) the STATE issues a Final Acceptance letter to the CONTRACTOR.

3. The Contact expiration date is for administrative purposes only and shall not be confused with the Time of Performance which refers to the time in which the CONTRACTOR is required to complete the Work, or with any continuing obligations on the part of the CONTRACTOR.

STATE OF HAWAII

CERTIFICATE OF EXEMPTION FROM CIVIL SERVICE

1. By Heads of Departments Delegated by the Director of the Department of Human Resources Development ("DHRD").*

Pursuant to a delegation of the authority by the Director of DHRD, I certify that the services to be provided under this Contract, and the person(s) providing the services under this Contract are exempt from the civil service, pursuant to § 76-16, Hawaii Revised Statutes (HRS).

(Signature) _____ (Date) _____

Jobie M. K. Masagatani
(Print Name)

Chairman, Hawaiian Homes Commission
(Print Title)

* This part of the form may be used by all department heads and the heads of attached agencies to whom the Director of DHRD expressly has delegated authority to certify § 76-16, HRS, civil service exemptions. The specific paragraph(s) of § 76-16, HRS, upon which an exemption is based should be noted in the contract file. If an exemption is based on § 76-16(b)(15), the contract must meet the following conditions:

(1) It involves the delivery of completed work or product by or during a specific time;
(2) There is no employee-employer relationship; and
(3) The authorized funding for the service is from other than the "A" or personal services cost element.

NOTE: Not all attached agencies have received a delegation under § 76-16(b)(15). If in doubt, attached agencies should check with the Director of DHRD prior to certifying an exemption under § 76-16(b)(15). Authority to certify exemptions under §§76-16(b)(2), and 76-16(b)(12), HRS, has not been delegated; only the Director of DHRD may certify §§ 76-16(b)(2), and 76-16(b)(12) exemptions.

2. By the Director of DHRD, State of Hawaii.

I certify that the services to be provided under this Contract, and the person(s) providing the services under this Contract are exempt from the civil service, pursuant to §76-16, HRS.

(Signature) _____ (Date) _____

(Print Name) _____

(Print Title, if designee of the Director of DHRD) _____

STATE OF HAWAII

SPECIAL CONDITIONS

Project: **Anahola Farm Lots Water Project, Phase I – Water Line Replacement**
Location: **Anahola, Kauai, Hawaii**
Contractor: **{TBD}**

SC-01 INTERCHANGEABLE TERMS

The following terms are one and the same:

a. "Contract" and "Agreement".
b. "Department of Hawaiian Home Lands" "Department" "DHHL" and "STATE".

SC-02 INSURANCE COVERAGE

The CONTRACTOR shall obtain separate insurance coverage for this project that complies with the requirements set forth in the DHHL Construction General Conditions, Article 7, Section 7.3, as amended. Payment for all work required to comply with this item will not be paid for separately but shall be considered incidental to the various contract items.

CONTRACTOR shall maintain insurance acceptable to the STATE in full force and effect throughout the term of this Contract. The policies of insurance maintained by CONTRACTOR shall provide the following minimum coverage:

Coverage	Limit
General Liability Insurance (occurrence form)	Bodily Injury and Property Damage (combined single limit): $1,000,000 per occurrence and $2,000,000 aggregate Personal Injury: $1,000,000 per occurrence and $2,000,000 aggregate
Automobile Insurance (covering all owned, non-owned and hired automobiles)	Bodily Injury: $1,000,000 per person and $1,000,000 per occurrence. Property Damage: $1,000,000 per accident or combined single limit of $2,000,000.
Workers Compensation (statutory limit is required by laws of the State of Hawaii)	Insurance to include Employer's Liability. Both such coverages shall apply to all employees of the CONTRACTOR and, in case any sub-contractor fails to provide adequate similar protection for all his employees, to all employees of subcontractors.
Builder's Risk covering the	100% Replacement Value

STATE OF HAWAII

SPECIAL CONDITIONS

CONTRACTOR and all subcontractors	
Fire and extended coverage	100% Replacement Value
Malicious Mischief	100% Replacement Value
Flood Insurance, if applicable	Maximum Coverage available

a. The State of Hawaii, Department of Hawaiian Home Lands, its elected and appointed officials, officers, employees, and agents shall be named as additional insured with respect to operations, services or products provided to the State of Hawaii. CONTRACTOR agrees to provide to the DHHL, before the effective date of the Contract, certificate(s) of insurance necessary to evidence compliance with insurance provisions of this Contract. CONTRACTOR shall keep such insurance in effect and the certificate(s) on deposit with DHHL during the entire term of this Contract. Upon request by the STATE, CONTRACTOR shall furnish a copy of the policy or policies.

b. Failure of CONTRACTOR to provide and keep in force such insurance shall be regarded as a material default under this Contract. The STATE shall be entitled to exercise any or all of the remedies provided in this Contract for default of CONTRACTOR.

c. The procuring of such required policy or policies of insurance shall not be construed to limit CONTRACTOR's liability under this Contract or to fulfill the indemnification provisions and requirements of this Contract. Notwithstanding said policy or policies of insurance, CONTRACTOR shall be obliged for the full and total amount of any damage, injury, or loss caused by negligence or neglect connected with this Contract.

d. CONTRACTOR shall immediately provide written notice to the contracting department or agency should any of the insurance policies evidenced on its Certificate of Insurance form be cancelled, limited in scope, or not renewed upon expiration.

e. DHHL is a self insured State agency. CONTRACTOR's insurance shall be primary. Any insurance maintained by the State of Hawaii shall apply in excess of, and shall not contribute with, insurance provided by CONTRACTOR.

f. The CONTRACTOR shall require all subcontractors to have in full force and effect the same insurance coverage as required of the CONTRACTOR. Such insurance shall name the State of Hawaii, Department of Hawaiian Home Lands, its elected and appointed officials, officers, employees, and agents as additional insured with respect to operations, services or products provided to the State of Hawaii. The CONTRACTOR shall be responsible to enforce its subcontractors' compliance with these insurance requirements and CONTRACTOR shall, upon request, provide the STATE a copy of the policy or policies of insurance for any subcontractor.

STATE OF HAWAII

SPECIAL CONDITIONS

SC-03 COMPLETION SCHEDULE AND LIQUIDATED DAMAGES

The CONTRACTOR shall complete all work as specified or indicated in the Contract Documents on or before FOUR HUNDRED SIXTY (460) calendar days after receiving written Notice to Proceed, subject to extensions, as may be granted.

In case of failure on the part of the CONTRACTOR to complete the work within the time specified, the CONTRACTOR shall pay to DHHL as liquidated damages, and not as a penalty, $1,000.00 per calendar day for each day that the project, in its entirety, remains incomplete.

SC-04 PROCESS THROUGH DHHL

Until the Notice to Proceed is issued, all submittals, reports, requests, claims and notices under the construction Contract shall be processed through DHHL, Land Development Division (LDD) Project Manager, Stewart Matsunaga, at Hale Kalanianaole, 91-5420 Kapolei Parkway, Kapolei, Hawaii 96707, phone no. 620-9283, fax no. 620-620-9299, with copies submitted to Construction Manager (Bowers+Kubota, Consulting, Inc.) and design Consultant (Oceanit Laboratories, Inc.).

After the Notice to Proceed has been issued, all submittals, reports, requests, claims and notices under the construction Contract shall be processed through the Construction Manager (CM), Bowers + Kubota, Consulting, Inc. (attn: Steve Ientile) at 3-2600 Kaumualii Highway, Suite E101, Lihue, HI 96766, phone no. 286-3830, fax no. 834-4833, with copies submitted to LDD and design Consultant (Oceanit Laboratories, Inc.).

SC-05 SURVEYING SERVICES

Refer to DHHL Construction General Conditions 5.93, March 2014

Any surveying services required shall be the responsibility of the contractor and considered incidental to the scope of work under this contract and therefore covered under the terms of this contract. No separate payment shall be made.

Upon completion, the Contractor shall prepare an as-built plan for the project site in which the finished grades are certified by a Registered Land Surveyor. Six (6) copies of the as-built plan shall be submitted to the Construction Manager and Engineer. The cost of the as-built plan shall be incidental to the contract. No separate payment shall be made.

SC-06 ALLOWANCES

The proposal may contain payment items designated as allowances. Funds listed in allowance items are to be spent at the direction of DHHL. The allowance is an estimate only and is subject to increase or decrease depending on the actual cost of the item. The funds are for the direct costs of an item and all pricing, submittal and review, overhead,

installation, profit, insurance, surety, processing of the issuance of checks for payment to other parties, and all other costs will be included. No payment will be made for incidental costs.

Allowances specifically set aside for construction work and materials will be negotiated when the scope of work is determined. Any unspent allowance costs will be deducted from the contract by change order prior to final payment.

SC-07 PERMITS AND FEES

CONTRACTOR shall apply and pay for all permits and inspection fees as required by all governmental agencies having jurisdiction over this project. CONTRACTOR shall obtain separate work permits as necessary, including but not limited to stockpiling and grading permits, and make separate payment of fees.

CONTRACTOR shall submit and receive approval for a Road Permit Application, with the County of Kauai Department of Public Works, Engineering Division prior to any work adjacent to or on the roadways.

All work necessary to comply with this item, will not be paid for separately but shall be considered incidental to the various Contract items, except structural inspection fees.

STATE OF HAWAII

SPECIAL CONDITIONS

SC-08 COORDINATION WITH OTHER PARTIES

The CONTRACTOR shall coordinate all the necessary work for temporary utility services, permanent service and appurtenances with the appropriate agencies, including but not limited to the Kauai County Department of Water Supply (KDOW), Kauai Island Utility Cooperative (KIUC), Kauai County Department of Public Works (DPW), The Gas Company, Hawaiian Telcom, Spectrum.

The Contractor shall coordinate with the Contractor for the Anahola Phase II – Water Tank Replacement project to ensure uninterrupted water service for the residents of the Anahola subdivision. The Contractor shall coordinate with the Phase II Contractor any required water service connections and all other necessary work. The Anahola Phase II – Water Tank Replacement project is planned to be undergoing construction concurrent to the Anahola Phase I – Water Line Replacement Project.

CONTRACTOR shall request, coordinate and schedule all inspections during construction, including but not limited to preliminary, pre-final and final inspections by all necessary government agencies or companies having jurisdiction or vested interests over or in any and all elements of the project.

All work necessary to comply with this item shall be considered incidental to the various Contract items. No separate payment shall be made.

SC-09 CONTRACTOR'S LICENSING

It is the CONTRACTOR’s sole responsibility to review the requirements of this project and determine the appropriate contractor's licenses that are required to complete the project. If the CONTRACTOR does not hold all of the licenses required to perform a particular item of work on this project with its own workers, when bidding, he must list subcontractors that hold the appropriate licenses in its proposal.

SC-10 WATER CHARGES AND REQUIREMENTS

The CONTRACTOR shall be solely responsible for obtaining water to meet any requirements of the contract. Unless otherwise indicated or provided for, any work, costs, charges and fees necessary to obtain water for this contract shall not be paid for separately but shall be considered incidental to the various contract items; no separate or additional payment will be made therefore.

STATE OF HAWAII

SPECIAL CONDITIONS

SC-11 SOIL AND DUST CONTROL

To control the dust during construction, the CONTRACTOR shall have an adequate supply of water for dust control and if necessary, moisture conditioning of fill material at all times. The CONTRACTOR shall institute an erosion control program and dust control program to minimize soil erosion and wind erosion and airborne fugitive dust nuisance, respectively for the entire duration of this project.

Dust control measures shall be implemented whether or not a dust fence is installed, unless directed otherwise by the Construction Manager.

SC-12 FINAL INSPECTION

Throughout the construction period, the work may be subject to periodic inspection by the Department, designated Construction Manager and Inspector, the County of Kauai Department of Water Supply, County of Kauai Department of Public Works and other applicable government agencies. Once work has been satisfactorily completed, the County, accompanied by the Department and Construction Inspector, will make the final inspection of the work to determine whether all work has been done in complete compliance with the requirements of the plans and these specifications.

The CONTRACTOR shall therefore schedule the final inspection with the County of Kauai Department of Water Supply, Kauai County Department of Public Works and notify the Department's Project Manager one week prior to said inspection.

Neither the scheduling nor the conduct of the aforementioned final inspection shall be deemed a waiver of the Department's right to subsequently require CONTRACTOR to complete all unfinished or defective work to the satisfaction of the Department.

SC-13 GENERAL CONDITIONS

In the event of conflicts and/or discrepancies, the DHHL Construction General Conditions (March 2014) shall govern over Form AG-008, 103D General Conditions (eff. 10/17/13)

SC-14 CAMPAIGN CONTRIBUTIONS BY STATE AND COUNTY CONTRACTORS

Contractors are hereby notified of the applicability of Section 11-355, HRS, which states that campaign contributions from specified State or County government contractors during the term of the contract if the contractors are paid with funds appropriated by a legislative body.

SC-15 CONTRACTOR'S DAILY REPORT

STATE OF HAWAII

SPECIAL CONDITIONS

The CONTRACTOR shall submit a daily report electronically, for DHHL review. (see Section 6.6 DHHL Daily Construction Report, for sample form)
The report shall include:

1. Date
2. Weather
3. Activity at the site for the Contractor
   a. Labor – who and what classification, i.e., carpenter, laborer, supervisor, etc.
   b. Equipment
   c. Materials delivered
   d. Work performed
4. Activity at the site for subcontractors
   a. Labor – who and what classification, i.e., carpenter, laborer, supervisor, etc.
   b. Equipment
   c. Materials delivered
   d. Work performed
5. Visitors to the site – Construction Manager, Inspectors, etc.
6. Problems or Questions (including suggested resolutions, if any)
7. Safety report status
8. Quality control report status

SC-16 COMPLIANCE WITH HAWAII REVISED STATUTES (HRS) CHAPTER 103B AS AMENDED BY ACT 192, SLH 2011 - EMPLOYMENT OF STATE RESIDENTS ON CONSTRUCTION PROCUREMENT CONTRACTS

The CONTRACTOR shall comply with the requirements of Hawaii Revised Statutes (HRS) Chapter 103B as amended by Act 192, SLH 2011, Employment of State Residents on Construction Procurement Contracts, as follows:

1. Definitions for terms used in HRS Chapter 103B as amended by Act 192, SLH 2011:

   a. "Contract" means contracts for construction under chapter 103D, HRS.

   b. "CONTRACTOR" has the same meaning as in section 103D-104, HRS, provided that "CONTRACTOR" includes a SUB-CONTRACTOR where applicable.

   c. "Construction" has the same meaning as in section 103D-104, HRS.

   d. "General CONTRACTOR" means any person having a construction contract with a governmental body.

   e. "Procurement Officer" has the same meaning as in section 103D-104, HRS.

   f. "Resident" means a person who is physically present in the State of Hawaii at the time the person claims to have established the person's domicile in the State of

Hawaii and shows the person's intent is to make Hawaii the person's primary residence.

g. "Shortage trade" means a construction trade in which there is a shortage of Hawaii residents qualified to work in the trade as determined by the Department of Labor and Industrial Relations.

2. HRS Chapter 103B as amended by Act 192, SLH 2011 – Employment of State Residents Requirements:

a. A CONTRACTOR awarded a contract shall ensure that Hawaii residents comprise not less than eighty per cent of the workforce employed to perform the contract work on the project. The 80% requirement shall be determined by dividing the total number of hours worked on the contract by Hawaii residents, by the total number of hours worked on the contract by all employees of the CONTRACTOR in the performance of the contract. The hours worked by any SUB-CONTRACTOR of the CONTRACTOR shall count towards the calculation for this section. The hours worked by employees within shortage trades, as determined by the Department of Labor and Industrial Relations (DLIR), shall not be included in the calculation for this section.

b. Prior to award of a contract, an Offeror/Bidder may withdraw an offer/bid without penalty if the Offeror/Bidder finds that it is unable to comply with HRS Chapter 103B as amended by Act 192, SLH 2011.

c. Prior to starting any construction work, the CONTRACTOR shall submit the subcontract dollar amount for each of its SUB-CONTRACTORS.

d. The requirements of this section shall apply to any subcontract of $50,000 or more in connection with the CONTRACTOR; that is, such SUB-CONTRACTORS must also ensure that Hawaii residents comprise not less than 80% of the SUB-CONTRACTOR'S workforce used to perform the subcontract.

e. The CONTRACTOR and any SUB-CONTRACTOR whose subcontract is $50,000 or more shall comply wit the requirements of HRS Chapter 103B as amended by Act 192, SLH 2011.

1) Certification of compliance shall be made in writing under oath by an officer of the General CONTRACTOR and applicable SUB-CONTRACTORS and submitted with the final payment.

2) The certification of compliance shall be made in writing under oath by an officer of the company by completing a "Certification of Compliance for Employment of State Residents" form and executing the Certificate before a

licensed notary public.

3) In addition to the certification of compliance as indicated above, the CONTRACTOR and SUB-CONTRACTORS shall maintain records such as certified payrolls for laborers and mechanics who performed work at the site and time sheets for all other employees who performed work on the project. These records shall include the names, addresses and numbers of hours worked on the project by all employees of the CONTRACTOR and SUB-CONTRACTOR who performed work on the project to validate compliance with HRS Chapter 103B as amended by Act 192, SLH 2011. The CONTRACTOR and SUB-CONTRACTORS shall retain these records and provide access to the State for a minimum period of four (4) years after the final payment, except that if any litigation, claim, negotiation, investigation, audit or other action involving the records has been started before the expiration of the four-year period, the CONTRACTOR and SUB-CONTRACTORS shall retain the records until completion of the action and resolution of all issues that arise from it, or until the end of the four year period, whichever occurs later. Furthermore, it shall be the CONTRACTOR'S responsibility to enforce compliance with this provision by any SUB-CONTRACTOR.

f. A General CONTRACTOR or applicable SUB-CONTRACTOR who fails to comply with this section shall be subject to any of the following sanctions:

1) With respect to the General CONTRACTOR, withholding of payment on the contract until the CONTRACTOR or its SUB-CONTRACTOR complies with HRS Chapter 103B as amended by Act 192, SLH 2011.

2) Proceedings for debarment or suspension of the CONTRACTOR or SUB-CONTRACTOR under Hawaii Revised Statues §103D-702.

CONTRACTOR is not a party listed on the government wide exclusions in the System for Award Management (SAM), in accordance with the OMB guidelines at 2 CFR part 180, as supplemented by 2 CFR part 417, "Debarment and Suspension." SAM exclusion records contain the names of parties debarred, suspended, or otherwise excluded by agencies, as well as parties declared ineligible under statutory or regulatory authority other than Executive Order 12549.

3. Conflict with Federal Law: This section shall not apply if the application of this chapter is in conflict with any federal law, or if the application of this chapter will disqualify any state or county agency from receiving federal funds or aid.

STATE OF HAWAII

SPECIAL CONDITIONS

SC-17 APPRENTICESHIP AGREEMENT PREFERENCE – CONTRACTOR'S RESPONSIBILITY [include if preference was applied in bid]

1. For the duration of the contract awarded utilizing the Hawai'i Apprenticeship Preference, the CONTRACTOR shall certify each month that work is being conducted on the project, that it continues to be a participant in the relevant apprenticeship program for each trade it employs.

2. Monthly certification shall be made on *MONTHLY REPORT OF CONTRACTOR'S PARTICIPATION IN APPROVED APPRENTICESHIP PROGRAM UNDER ACT 17 (Monthly Certification Form 2)* prepared and made available by the DLIR. *Monthly Certification Form 2* shall be a signed original by the respective apprenticeship program sponsor's authorized official, and submitted by the Contractor with its monthly payment requests. *Monthly Certification Form 2* is available on the DLIR website at: http://hawaii.gov/labor/wdd

3. Should the Contractor fail or refuse to submit its monthly certification forms, or at any time during the construction of the project, cease to be a party to a registered apprenticeship agreement for each apprenticeable trade the Contractor employs, the Contractor will be subject to the following sanctions:

   a. Withholding of the requested payment until the required form(s) are submitted;

   b. Temporary or permanent cessation of work on the project, without recourse to breach of contract claims by the Contractor; provided the DHHL shall be entitled to restitution for nonperformance or liquidated damages claims; or

   c. Proceed to debar pursuant to HRS §103D-702.

4. If events such as "acts of God," acts of a public enemy, acts of the State or any other governmental body in its sovereign or contractual capacity, fires, floods, epidemics, freight embargoes, unusually severe weather, or strikes or other labor disputes prevent the Contractor from submitting the certification forms, the Contractor shall not be penalized as provided herein, provided the Contractor completely and expeditiously complies with the certification process when the event is over.

SC-18 FEDERAL LABOR STANDARDS

[required when Federal funds, USDA-RD, are used.]

The CONTRACTOR and its subcontractors shall comply with the Davis-Bacon Act (40 U.S.C. 3141-3144, and 3146-3148) as supplemented by Department of Labor regulations (29 CFR Part 5, "Labor Standards Provisions Applicable to Contracts Covering Federally Financed and Assisted Construction"). CONTRACTOR and its contractors shall pay wages to laborers and mechanics at a rate not less than the prevailing wages specified in

the wage determination made by the Secretary of Labor. CONTRACTOR and its contractors shall also pay wages not less than once a week.

SC- 19 ENERGY EFFICIENCY
[required when Federal funds, USDA-RD. are used.]

The CONTRACTOR and its subcontractors shall comply with the Energy Policy and Conservation Act (P.L. 94-163) and all mandatory State and County standards and policies relating to energy efficiency.

SC-20 COPELAND "ANTI-KICKBACK" ACT
[required when Federal funds, USDA-RD, are used.]

The CONTRACTOR shall comply with the Copeland Anti-Kickback Act (18 USC 874 and 40 USC 276c) as supplemented by Department of Labor regulations (29 CFR Part 3, "Contractors and Subcontractors on Public Buildings or Public Works Financed in Whole or in Part by Loans or Grants of the United States"). The Act provides that Contractor or subcontractor shall be prohibited from inducing, by any means, any person employed in the construction, completion, or repair of public facilities, to give up any part of the compensation to which they are otherwise entitled.

SC-21 CLEAN AIR ACT AND FEDERAL WATER POLLUTION CONTROL ACT
[required when Federal funds, USDA-RD, are used.]

Developer and its subcontractors shall to comply with all applicable standards, orders or regulations issued pursuant to the Clean Air Act (42 U.S.C. 7401-7671q) and the Federal Water Pollution Control Act as amended (33 U.S.C. 1251-1387).

SC-22 CONTRACT WORK HOURS AND SAFETY STANDARDS
[required when Federal funds, USDA-RD, are used.]

Developer and its subcontractors shall comply with 40 U.S.C. 3702 and 3704, as supplemented by Department of Labor regulations (29 CFR Part 5).

SC-23 EQUAL EMPLOYMENT OPPORTUNITY
[required when Federal funds, USDA-RD, are used.]

Developer and its subcontractors shall comply with the equal opportunity clause provided under 41 CFR 60-1.4(b), in accordance with Executive Order 11246, "Equal Employment Opportunity" (30 FR 12319, 12935, 3 CFR Part, 1964-1965 Comp., p. 339), as amended by Executive Order

11375, "Amending Executive Order 11246 Relating to Equal Employment Opportunity," and implementing regulations at 41 CFR part 60, "Office of Federal Contract Compliance Programs, Equal Employment Opportunity, Department of Labor," incorporated herein by reference.

SC-24 AGENCY CONCURRENCE

This Contract shall not be effective unless and until the U.S. Department of Agriculture (USDA), Rural Development's State program official or designee concurs in writing.

SC-25 DEBARMENT AND SUSPENSION

CONTRACTOR shall file the required certification that it has not used Federal appropriated funds to pay any person or organization for influencing or attempting to influence an officer or employee of any agency, a member of Congress, officer or employee of Congress, or an employee of a member of Congress in connection with obtaining any Federal contract, grant or any award covered by 31 U.S.C. 1352.

SC-26 GEOTECHNICAL ENGINEERING

The services of a geotechnical engineering firm will be retained by the CONTRACTOR (see SC-06). A representative of the geotechnical engineer shall be present at the site to observe site grading, trenching and backfilling work, and other work, and to take field density tests. Also, the geotechnical engineer will perform laboratory testing of CONTRACTOR-submitted soils to determine their acceptability for use as base course, subbase and fill materials. The geotechnical engineer shall also perform compaction tests for embankments, subbase, base course and trench and structural backfill. The Geotechnical Engineer's authority shall be as described in DHHL Construction General Conditions, Section 5.4 (March 2014).

The CONTRACTOR shall request compaction tests a minimum of 48-hours in advance. Sufficient time shall be allotted to perform field and laboratory tests prior to the placement of material. Resultant delays shall be governed by Section 7.21 of the DHHL Construction General Conditions (March 2014).

The CONTRACTOR shall be held responsible for the following geotechnical testing costs:

1. All compaction tests performed in the same area where a test has previously been performed.

2. Delay(s) to the Geotechnical Engineer caused by missing or delaying a scheduled soils test.

The CONTRACTOR shall compensate DHHL for all costs associated with any or all of the above situations.

The Geotechnical Engineer will keep a record of the associated cost impacts. These cost impacts will be deducted from the contract price by change order(s).

The density test results will be transmitted to the CONTRACTOR and to the Construction Manager. Where low density test results are noted, the area shall be reworked by the CONTRACTOR and retested by the geotechnical engineer. No additional material shall be placed until the required compaction is attained.

If the field observations and test results, in the opinion of the geotechnical engineer, indicate that the earthwork, trenching and backfilling work, and other work are not in general conformance to the intent of the plans and geotechnical engineering report (if available), the discrepancy will be reported to the CONTRACTOR and the Construction Manager for corrective action. The CONTRACTOR shall remove and replace the material at the CONTRACTOR'S own expense and no additional compensation shall be made to the CONTRACTOR by the Department.

SC-27 COMPENSATION FOR REMOVAL OF ABANDONED VEHICLES, TRASH OR DUMPED ITEMS

Any and all abandoned vehicles, boats or other means of transportation and all appliances and discards of every description found within 5-feet of the actual work limits during the duration of this contract shall be promptly and totally removed from the site. The cost shall be considered incidental to the applicable proposal items and not paid for separately.

The CONTRACTOR is solely responsible for taking precautions to prevent unauthorized access during working and non-working hours to eliminate illegal dumping within these areas during the entire duration of the project.

SC-28 ARCHEOLOGICAL SITES

The services of a professional Archaeological Monitoring firm will be retained by the CONTRACTOR. (see SC-06 and Section 7.7, Table of Contents).

Archeological Monitoring shall be in accordance with the Archeological Monitoring Plan (AMP) which will be provided. (see Section 7.7, Table of Contents).

CONTRACTOR shall ensure that all excavation work is monitored by an Archaeological monitor. The archaeological monitor shall submit weekly reports on observations and log actual hours of inspection in the field.

If the CONTRACTOR encounters a potential archeological site or burials during construction, all work shall immediately cease all operations in the area and contact the Construction Manager.

STATE OF HAWAII

SPECIAL CONDITIONS

SC-29 INADVERTENT DISCOVERY OF HUMAN BURIALS

Although not expected, in the event human burials are inadvertently discovered, the CONTRACTOR shall immediately stop work in the vicinity of the burial and contact the following parties and agencies immediately: State Historic Preservation Division, the Construction Manager, the Consultant, the Office of Hawaiian Affairs, Hui Malama I Na Kupuna 'O Hawai'i Nei, and the Kauai Island Burial Council.

The burial and the area in its vicinity shall be protected until DHHL has been advised of the proper Native American Graves Protection and Repatriation Act of 1990 (NAGPRA) process for burial treatment to undertake and until the selected NAGPRA process has been concluded.

DHHL shall provide the CONTRACTOR with a Supplemental Agreement for additional time added to the CONTRACTOR's performance schedule for the mitigation of any inadvertent discovery of human remains.

SC-30 DELETED ITEMS

Depending on the site and soil conditions and other factors, the Construction Manager may decide to delete a portion or all of a Proposal item in its entirety. A change order shall be issued to delete the work and the contract amount shall be reduced by subtracting the corresponding proposal item amount. If part of the work is done, or if the work exceeds the estimated quantities, payment shall be made on the actual number of units incorporated in the work at the unit price bid.

No claim shall be filed for anticipated profit or loss resulting from the deletion of all or part of the proposal item except as indicated in DHHL Interim General Condition 4.6. Refer also to DHHL Construction General Condition 4.6, March 2014.

SC-31 RESTORATION OF DHHL PROPERTY

Any areas cleared or graded by the CONTRACTOR for field office(s), staging or storage operations located in DHHL lots shall be backfilled to the original (or finished) elevations, slopes and grades (shown on the plans) and/or graded to provide proper drainage prior to the completion of the project. The backfilled areas shall be covered with a asphaltic concrete pavement or 4-inch layer of topsoil and immediately grassed as indicated on the plans.

The backfilling and grassing shall be conducted in accordance with the applicable sections of the contract. Fill material required to backfill these areas, placement and compaction thereof, provision of topsoil and its placement, and grassing and 90-day irrigation will not be paid for separately but shall be incidental to the various contract items.

SC-32 AS-BUILT DRAWINGS/RECORD DRAWINGS

STATE OF HAWAII

SPECIAL CONDITIONS

As-Built Drawings:

The CONTRACTOR shall provide as-Built drawings. The As-Built drawings shall show the actual construction so that any future renovations or tie-ins can be anticipated accurately.

The CONTRACTOR shall record all deviations from the drawings that were authorized by the Construction Manager onto the copy of the field plans. The changes shall be recorded immediately after they have been constructed in place to assure they are recorded before they are forgotten.

The CONTRACTOR shall record the changes onto the field office plans using a red pencil. The CONTRACTOR shall stamp, sign and date each sheet of the field office plans. The stamp shall contain the words "As-Built Drawings" and include a statement signed by the CONTRACTOR certifying that the drawings on the sheet accurately and completely reflect and show the actual as-built construction. The stamp format and wording shall be submitted to the Construction Manager for prior approval.

The CONTRACTOR shall submit the marked up field office plans for the project, stamped, signed and dated, to the Construction Manager after the improvements for each respective portion of the project have been completed.

Record Drawings:

All changes shown on the As-Built drawings will be recorded on the original tracings, which will then become the record drawings. The Consultant(s) shall be responsible for preparing the record drawings. The Consultant(s) shall stamp, sign and date the title sheet tracing of the record drawings. The stamp shall contain the words "Record Drawings."

The CONTRACTOR shall review the changes made and certify the record drawings by signing and dating the record drawing title sheet tracing where indicated. Any deviations from the plans determined by the Construction Manager to be missing from, incomplete, or inaccurately drawn on the As-Built drawings shall be corrected on the record drawing tracings by the State and the CONTRACTOR shall be charged for the services. The State will keep a record of the associated cost impacts and deduct them from the contract price.

Payment for all work required to comply with this item will not be paid for separately but shall be considered incidental to the various contact items.

SC-33 FINAL SETTLEMENT OF CONTRACT

The following shall be made additional conditions of compliance with DHHL Construction General Conditions, March 2014:

STATE OF HAWAII

SPECIAL CONDITIONS

1. The CONTRACTOR shall coordinate with all government agencies and utility companies on behalf of DHHL to obtain letter(s) from each respective government agency or utility company indicating that acceptance of the contract work for the project has been granted to DHHL. Copies of the letters shall be submitted to DHHL.

2. Signature, execution, and return of the "Record Drawing" Title tracings.

Payment for all work required to comply with the above items will not be paid for separately but shall be considered incidental to the various contract items.

SC-34 CONSTRUCTION MANAGER AND ENGINEER INSPECTION

The DHHL will engage the Construction Manager (CM) for limited construction or full observation to supplement the inspections performed by the State and respective Counties.

CM's and Engineer's authority shall be as described in DHHL Construction General Condition 5, March 2014. The CM will act as the DHHL representative while on the project site.

SC-35 EXISTING OCCUPIED LOTS

The CONTRACTOR shall provide and maintain continuous vehicular access and utility service (water, telephone and electrical) to the various occupied lots within and surrounding the project for the duration of construction and to the satisfaction of the Construction Manager unless as necessary as part of the project and the Construction Manager and Landowner have been notified. The CONTRACTOR shall identify, locate and protect all utility services to these lots prior to any construction activity. Refer to DHHL Construction General Conditions, March, 2014.

The CONTRACTOR shall provide safe and convenient access to these lots at all times to the satisfaction of the Construction Manager. The CONTRACTOR shall also coordinate any temporary utility services with the proper utility companies. The CONTRACTOR shall pay all utility installation charges and fees to any utility company for any temporary utility connections.

The CONTRACTOR shall notify the lot owners and Construction Manager in writing two (2) weeks prior to commencing any work affecting access and/or utility service. Copies of all notifications shall be provided to the Construction Manager.

The Department will consider the requirements imposed by this subsection and work done by the CONTRACTOR to comply with this subsection incidental to the various contract items. The Department will not make separate or additional payment.

Delays which concern, and arise from the residents of, or the requirements of providing continuous access to, or performing construction activities around and adjoining, the private and DHHL lots will be governed by Section 7.21.5 of the DHHL Interim General Conditions.

SP-36 DISCREPANCIES BETWEEN CONSTRUCTION DRAWINGS AND PROPOSAL SCHEDULE

In the event of any discrepancies between the proposal schedule and the construction drawings, the items shown on the construction drawings shall govern and the contractor shall follow the items shown on the construction drawings.

SC-37 PROJECT SIGN

The Contractor shall furnish, erect, maintain and remove (2) project signs. One (1) sign shall be based on the State of Hawaii standards, and one (1) sign shall follow the USDA template as shown on page 24 of this document.

The State of Hawaii sign shall adhere to the details and specifications as follows.

The project signboard shall be ¾" thick, "AC" exterior grade fir plywood, 4 feet in height in 7 feet long. All lettering type and size and color selection shall be as specified below.

All paints used shall be exterior enamel paints manufactured either by Ameritone-Devoe, Boysen, DuPont, Dutch Boy, Fuller-O'Brien, Glidden, Pittsburg, Sherwin-Williams, Sinclair, or approved equal, and made primarily for the purpose for which they are used, and shall be prepared and applied strictly in accordance with the manufacturer's directions. Sign shall be painted with one prime coat and two finish coats.

Final layout shall be based upon sign plans submitted by the Contractor and approved by the DHHL.

The Project Sign shall be erected at a location directed by the DHHL and shall be adequately braced in such a way that does not interfere with the viewing of the sign. The sign shall be maintained in good condition throughout the progress of the work until final completion of the project. The project sign shall be erected within five (5) days after approval of the sign layout. After the final approval of the construction work by the DHHL, the project sign shall be removed from the site and shall become property of the Contractor. The project sign shall not be removed without prior approval from DHHL.

Payment will be made for one (1) project sign painted, with lettering specified by DHHL, in place complete. Payment for sign removal shall be incidental to said item.

STATE OF HAWAII

SPECIAL CONDITIONS

PROJECT SIGN SPECIFICATIONS

LETTER STYLE

COPY IS CENTERED AND SET IN ADOBE TYPE FUTURA HEAVY. IF THIS SPECIFIC TYPE IS NOT AVAILABLE, FUTURA DEMI BOLD MAY BE SUBSTITUTED. COPY SHOULD BE SET AND SPACED BY A PROFESSIONAL TYPESETTER AND ENLARGED PHOTOGRAPHICALLY FOR PHOTO STENCIL SCREEN PROCESS.

ART WORK

CONSTANT ELEMENTS OF THE SIGN LAYOUTS -- FRAME, OUTLINE, STRIPE, AND OFFICIAL STATE INFORMATION -- MAY BE DUPLICATED FOLLOWING WORKING DRAWING MEASUREMENTS OR BE REPRODUCED AND ENLARGED PHOTOGRAPHICALLY USING A LAYOUT TEMPLATE IF PROVIDED. THE STATE OF HAWAII" MASTHEAD SHOULD BE REPRODUCED AND ENLARGED AS INDICATED USING THE ARTWORK PROVIDED.

TITLES

THE SPECIFIC MAJOR WORK OF THE PROJECT UNDER CONSTRUCTION IS EMPHASIZED BY USING 3-3/4" TYPE (OR AS SPECIFIED BY DHHL), ALL CAPITALS. SECONDARY INFORMATION SUCH AS LOCATIONS OR BUILDING USES 2-1/4" TYPE, ALL CAPITALS. OTHER RELATED INFORMATION OF LESSER IMPORTANCE USES 2-1/4" (CAPITAL HEIGHT) TYPE IN LOWER CASE LETTERS. ALL LINES OF TYPE SHOULD NOT EXCEED THE WIDTH OF THE 6'— 2" STRIPE.

MATERIALS

PANEL IS 3/4" THICK, "AC" EXTERIOR GRADE FIR PLYWOOD WITH RESIN BONDED SURFACES ON BOTH SIDES.

PAINT AND INKS

SCREEN PAINT INKS ARE MATTE FINISH. PAINTS ARE SATIN FINISH, EXTERIOR GRADE. REFERENCE TO AMERITONE COLOR KEY PAINT IS FOR COLOR WHICH MATCH ONLY.

COLOR:

1. 1BL1OA BOHEMIAN BLUE
2. 2H16P SOFTLY (WHITE)
3. 2VR2A HOT TANGO (RED)
4. 1M52E TOKAY (GRAY)

STATE OF HAWAII

SPECIAL CONDITIONS

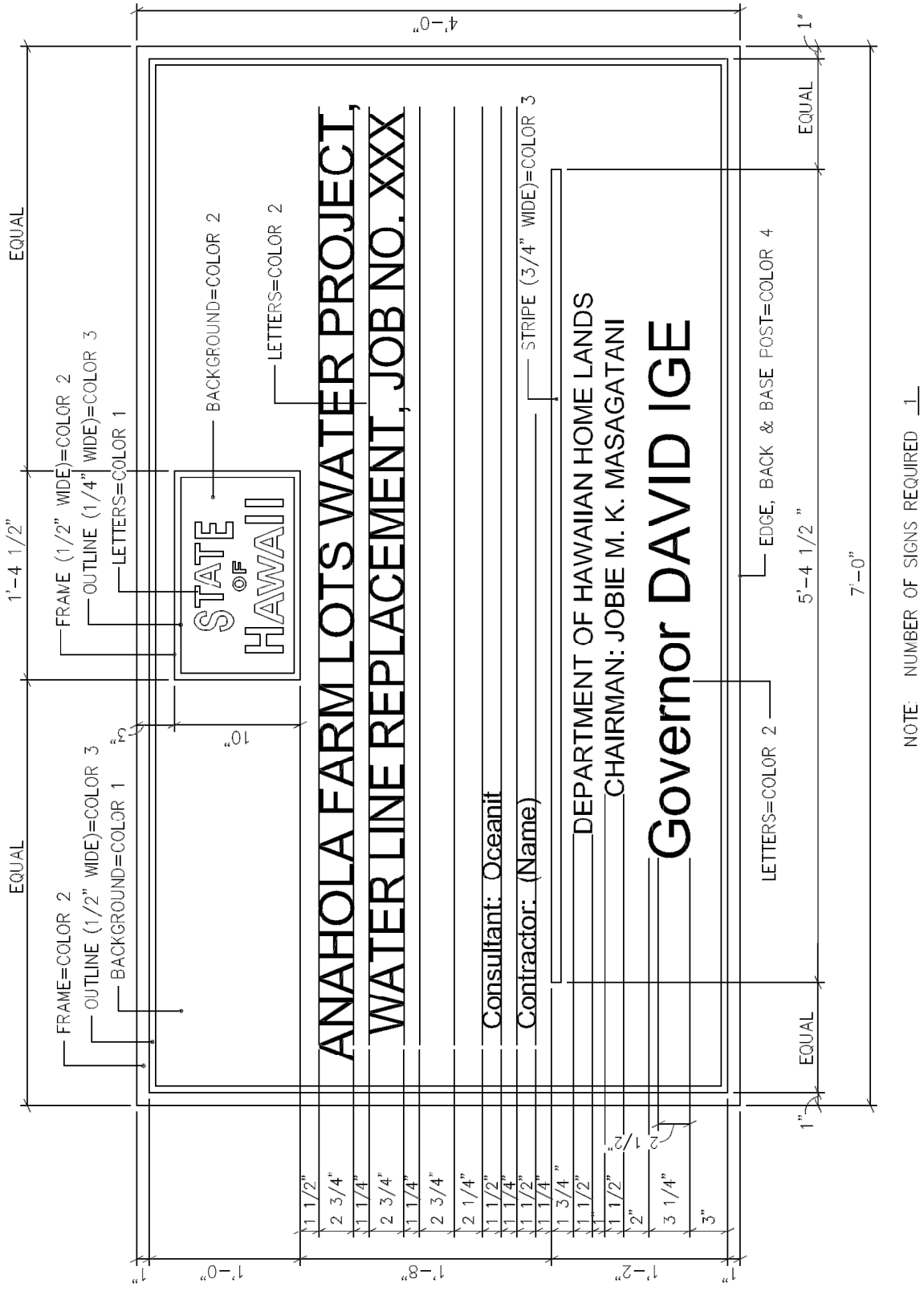

STATE OF HAWAII

SPECIAL CONDITIONS

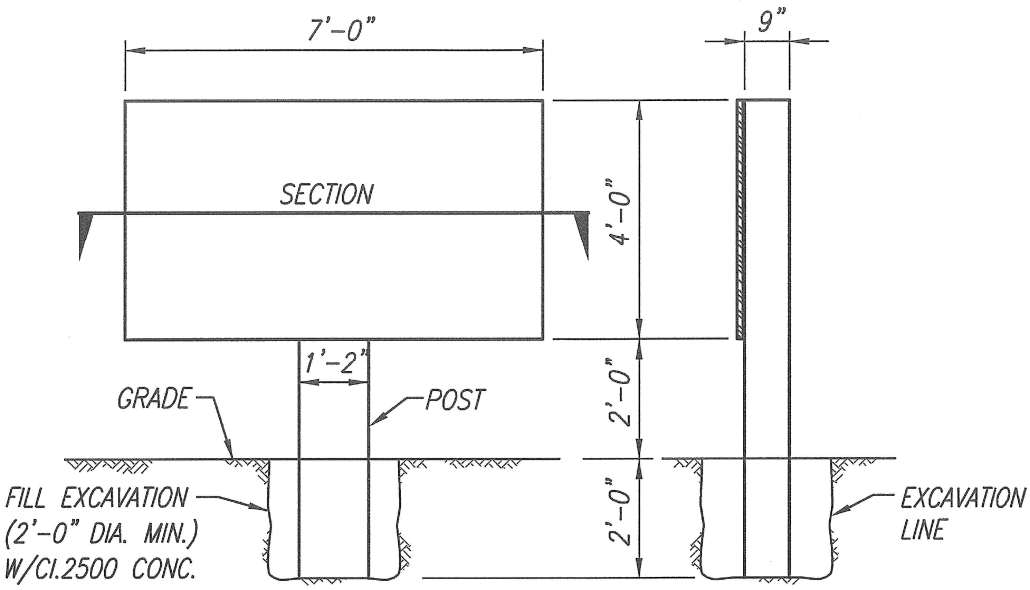

ELEVATIONS

NOT TO SCALE

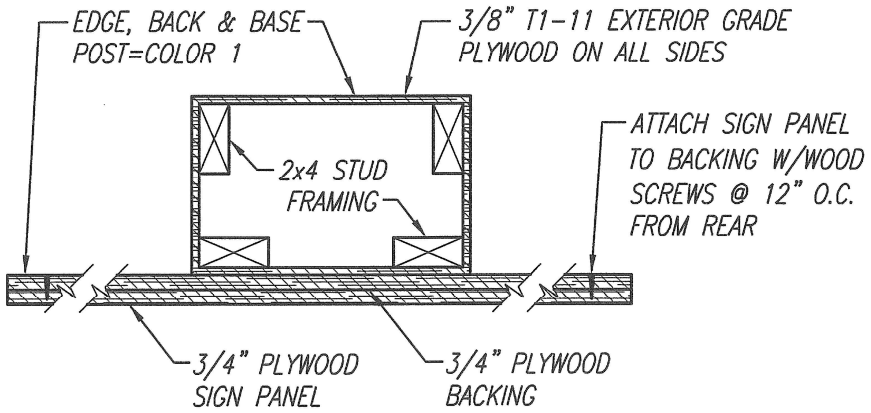

SECTION

NOT TO SCALE

STATE OF HAWAII

SPECIAL CONDITIONS

TEMPORARY CONSTRUCTION SIGN FOR RURAL DEVELOPMENT PROJECTS

Recommended Fonts: Helvetica, Arial, or Myriad Pro

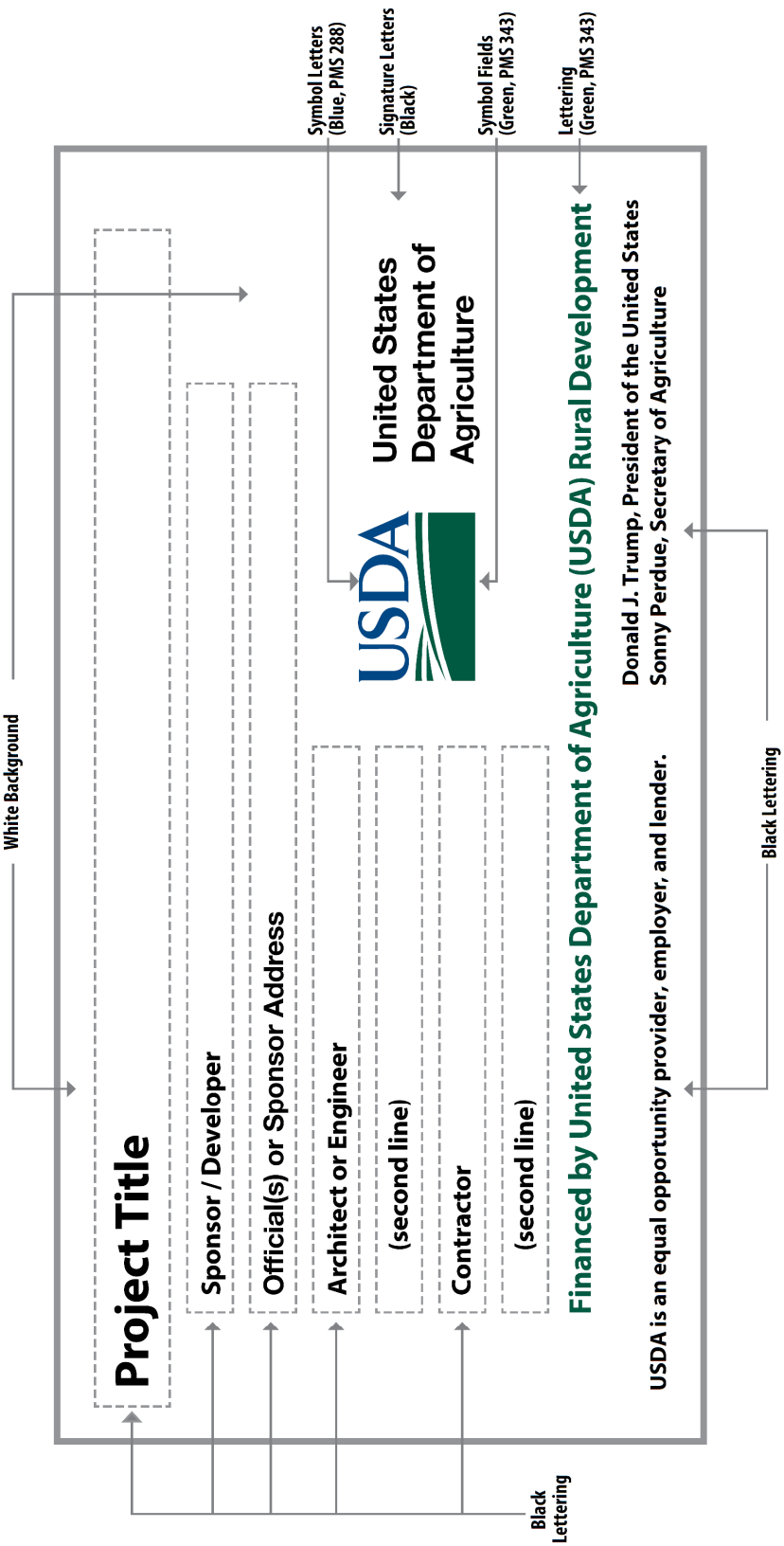

SIGN DIMENSIONS : 1200 mm x 2400 mm x 19 mm (approx. 4′ x 8′ x ¾″)
PLYWOOD PANEL (APA RATED A-B GRADE–EXTERIOR)

STATE OF HAWAII

SPECIAL CONDITIONS

SC-38 ADDITIONAL WORK PROCEDURES

The CONTRACTOR shall comply with the following measures for the duration of the contract:

The CONTRACTOR shall maintain on the site at all times and in good condition any equipment and safety requirements.

The CONTRACTOR shall not burn any material on-site. All flammable rubbish, refuse, plant material from grubbing and clearing, packing materials, crating or any other combustibles shall be removed from the site, and disposed of offsite or in a manner approved by the Construction Manager. Removal of tar shall be disposed in a manner approved by the Department of Health and Environmental SUB-CONSULTANT.

All spilled fuels shall be immediately processed with an approved nitrogen compound to counteract leaching.

The requirements indicated in this section, except for those pertaining to tanker maintenance and operation, shall be made a part of any of the agreements between the CONTRACTOR and any SUB-CONTRACTORS retained by it.

Payment for any work necessary to comply with the requirements of this section shall not be made separately but shall be included under applicable proposal items.

SC-39 FIRE CONTINGENCY PLAN

Prior to the start of any work, the CONTRACTOR shall prepare and file a written fire contingency plan with the Construction Manager for review and acceptance. The Fire Contingency Plan shall incorporate the following features as a minimum:

1. Communication System. Prior to any on-site actions the CONTRACTOR shall establish a communications system capable of reaching local emergency services. The job supervisor or his designee must carry a cellular telephone at all times. Communication linkages must be maintained with all emergency services until completion and acceptance of the work covered by this contract.

2. Development of a Firefighting Plan. The CONTRACTOR will be responsible to maintain fire control at all times.

STATE OF HAWAII

SPECIAL CONDITIONS

SC-40 CONTRACTOR'S BONDS

The CONTRACTOR shall obtain bonds for the work pertaining to the project in accordance with DHHL Interim General Conditions, Section 3.7. Payment for all work required to comply with this item will not be paid for separately but shall be considered incidental to the various contract items.

SC-41 NPDES PERMITS

The CONTRACTOR must complete, and submit NPDES Form F – Hydrotesting and receive approval if they are planning to release or discharge hydrotesting waters to State Waters.

CONTRACTOR shall provide DHHL with a site-specific Best Management Practices (BMPs) Plan, and the Solid Waste Disclosure Form for Construction Sites for this project.

SC-42 STANDARD SPECIFICATIONS

The "HAWAII STANDARD SPECIFICATIONS FOR ROAD, AND BRIDGE CONSTRUCTION, 2005" and its amendments of the Department of Transportation, of the State of Hawaii, is by reference incorporated herein and made a part of these specifications. The term "Standard Specifications" used hereinafter refers to this "HAWAII STANDARD SPECIFICATIONS FOR ROAD, AND BRIDGE CONSTRUCTION, 2005."

SC-43 STANDARD DETAILS

The "STANDARD DETAILS FOR PUBLIC WORKS CONSTRUCTION, September 1984", as amended of the Departments of Public Works, County of Kauai, County of Maui, County of Hawaii and City and County of Honolulu, of the State of Hawaii, is by reference incorporated herein and made a part of these specifications. The term "Standard Details" used hereinafter refers to this "STANDARD DETAILS FOR PUBLIC WORKS CONSTRUCTION, September 1984."Copies of the Standard Details are on file and may be inspected at Division of Purchasing during regular business hours of the City.

The work embraced herein shall be done in accordance with the Standard Details insofar as they may apply.

SC-44 WATER SYSTEM SPECIFICATIONS

The "2002 WATER SYSTEM STANDARDS" adopted by the Hawaii County Department of Water Supply, City and County of Honolulu Board of Water Supply, Kauai County Department of Water, and Maui County Department of Water Supply; the "COUNTY OF KAUAI DEPARTMENT OF WATER 2005 AMENDMENTS"; and the "WATER SYSTEM EXTERNAL CORROSION CONTROL STANDARDS," Volume 3, of the Board of Water Supply, City and county of Honolulu dated 1991; and all subsequent amendments and

additions, are by reference incorporated herein and made a part of these contract documents. The work embraced herein shall be performed by the CONTRACTOR in accordance with the "WATER SYSTEM STANDARDS" the "WATER SYSTEM EXTERNAL CORROSION CONTROL STANDARDS," Volume 3, and the various sections of the Special Provisions.

The term "Water System Standards" used in these contract documents refers to the "WATER SYSTEM STANDARDS" adopted by the Hawaii County Department of Water Supply, City and County of Honolulu Board of Water Supply, Kauai County Department of Water, and Maui County Department of Water Supply, dated 2002; the "COUNTY OF KAUAI DEPARTMENT OF WATER 2005 AMENDMENTS"; and the "WATER SYSTEM EXTERNAL CORROSION CONTROL STANDARDS," Volume 3, of the Board of Water Supply, City and county of Honolulu dated 1991,and all subsequent amendments and additions.

The "Water System Standards" shall take precedence unless specified otherwise in the contract documents and technical specifications.

The CONTRACTOR shall notify the Kauai Department of Water and the Construction Manager in writing one week prior to commencing work on the water system.

SC-45 FIELD OFFICE

A field office is not required.

SC-46 DOCUMENTATION OF EXISTING IMPROVEMENTS

The CONTRACTOR shall compile documentation and records of the existence and condition of any significant existing structures and improvements adjacent to the project site immediately before he begins work.

"Immediately before", in this case only, shall be defined as no more than twelve (12) hours, and no less than one (1) hour, before beginning any construction activity, including but not limited to clearing, grubbing, or earthwork, occurs.

Improvements, which shall be documented, shall include, but not be limited to;

1. Improvements that could be directly affected by dust nuisance, silt damage from heavy rain, or weakening of foundations of supporting earth by earthmoving operations or machinery vibration.

2. Significant improvements within 25-feet of the work area limits such as existing houses, sheds, structures, fences, posts, walls, trees, shrubs, lawns landscaping, gardens and driveways.

3. Existing roads approaching or adjoining any work area.

Documentation shall be done by the CONTRACTOR on the day work commences and shall be done by photographs.

All photographs taken shall be color, dated and numbered. A reference site map shall be prepared by the CONTRACTOR indicating the approximate locations, and directions, that the photographs were taken from by referencing the photograph numbers to an appropriate number, and arrow, on the site map.

A copy of all materials; the photographs and accompanying reference site map shall be submitted to, and become the property of DHHL within (7) working days after documentation occurs. Photographs shall be mounted and bound for submittal. Laser copied or mounted photographs in a binder or photograph album will be acceptable. Loose photographs are not acceptable. A letter identifying the materials, their date of recordation, the time(s), and person(s) involved in the recordation, and a statement to the effect that the materials being submitted are a record of existing visible conditions observed immediately prior to the start of construction shall also be provided. Submittal of the photographs, maps and descriptions in digital format on a compact disk (CD) is also acceptable.

The CONTRACTOR shall keep their own copy of the materials for their files.

The Department will also compile their own separate independent documentation on the existence and condition of the existing improvements. Therefore, it is imperative that the CONTRACTOR adhere to the requirements of the DHHL Construction General Conditions, March, 2014 regarding notification prior to beginning any work.

The Department will consider the requirements imposed by this subsection and work done by the CONTRACTOR to comply with this subsection incidental to the various contract items. The Department will not make separate or additional payment.

SC-47 BYRD ANTI-LOBBYING AMENDMENT (31 U.S.C. 1352)

CONTRACTOR shall file the required certification that it has not used Federal appropriated funds to pay any person or organization for influencing or attempting to influence an officer or employee of any agency, a member of Congress, officer or employee of Congress, or an employee of a member of Congress in connection with obtaining any Federal contract, grant or any other award covered by 31 U.S.C. 1352.

SC-48 CHANGE ORDERS

[required when Federal funds, USDA-RD, are used.]

STATE OF HAWAII

SPECIAL CONDITIONS

This Contract is expected to be funded in part with funds provided by the United States Department of Agriculture, Rural Utilities Service (RUS). RUS approval is required before Change Orders are effective. A Work Change Directive cannot change Contract Price or Contract Times without a subsequent Change Order.

SC-49 PROJECT CASHFLOW DRAWDOWN SCHEDULE

The CONTRACTOR shall submit a project schedule and cashflow drawdown schedule within seven (7) working days of the formal Notice to Proceed date. The project cashflow drawdown schedule shall show for each line item on the Bid Recapitulation of the bid proposal the amount of the item, and the projected monthly cashflow draw down for the item over the anticipated duration of the project. The extended total of each line item shall equal the sum bid for that line item and the total of all line items shall equal the total sum bid for the project. The project cashflow draw down schedule is a "one-time only" submittal and need not be updated with and submitted with each request for payment.

See Attachment 1, sample for the CONTRACTOR'S use.

Payment for this item shall be considered incidental to the various contract items.

ATTACHMENT 1 (SC-49 SAMPLE PROJECT CASHFLOW DRAWDOWN SCHEDULE)

		Estimated Expenditures						
	Contract Amount	Month 1	Month 2	Month 3	Month 4	Month 5	Month 6	Total
Mobilization								
Demolition								
Excavation								
Concrete work								
Tar Removal								
Embankment								
Landscaping								
Project Total								

GENERAL CONDITIONS

Table of Contents

Page(s)

1. Coordination of Services by the STATE 2
2. Relationship of Parties: Independent Contractor Status and Responsibilities, Including Tax Responsibilities 2
3. Personnel Requirements 3
4. Nondiscrimination 3
5. Conflicts of Interest 3
6. Subcontracts and Assignments 3
7. Indemnification and Defense 4
8. Cost of Litigation 4
9. Liquidated Damages 4
10. STATE'S Right of Offset 4
11. Disputes 4
12. Suspension of Contract 4
13. Termination for Default 5
14. Termination for Convenience 6
15. Claims Based on the Agency Procurement Officer's Actions or Omissions 8
16. Costs and Expenses 8
17. Payment Procedures; Final Payment; Tax Clearance 9
18. Federal Funds 9
19. Modifications of Contract 9
20. Change Order 10
21. Price Adjustment 11
22. Variation in Quantity for Definite Quantity Contracts 11
23. Changes in Cost-Reimbursement Contract 11
24. Confidentiality of Material 12
25. Publicity 12
26. Ownership Rights and Copyright 12
27. Liens and Warranties 12
28. Audit of Books and Records of the CONTRACTOR 13
29. Cost or Pricing Data 13
30. Audit of Cost or Pricing Data 13
31. Records Retention 13
32. Antitrust Claims 13
33. Patented Articles. 13
34. Governing Law 14
35. Compliance with Laws 14
36. Conflict between General Conditions and Procurement Rules 14
37. Entire Contract 14
38. Severability 14
39. Waiver 14
40. Pollution Control 14
41. Campaign Contributions 14
42. Confidentiality of Personal Information 14

1. Coordination of Services by the STATE. The head of the purchasing agency ("HOPA") (which term includes the designee of the HOPA) shall coordinate the services to be provided by the CONTRACTOR in order to complete the performance required in the Contract. The CONTRACTOR shall maintain communications with HOPA at all stages of the CONTRACTOR'S work, and submit to HOPA for resolution any questions which may arise as to the performance of this Contract. "Purchasing agency" as used in these General Conditions means and includes any governmental body which is authorized under chapter 103D, HRS, or its implementing rules and procedures, or by way of delegation, to enter into contracts for the procurement of goods or services or both.

2. Relationship of Parties: Independent Contractor Status and Responsibilities, Including Tax Responsibilities.

   a. In the performance of services required under this Contract, the CONTRACTOR is an "independent contractor," with the authority and responsibility to control and direct the performance and details of the work and services required under this Contract; however, the STATE shall have a general right to inspect work in progress to determine whether, in the STATE'S opinion, the services are being performed by the CONTRACTOR in compliance with this Contract. Unless otherwise provided by special condition, it is understood that the STATE does not agree to use the CONTRACTOR exclusively, and that the CONTRACTOR is free to contract to provide services to other individuals or entities while under contract with the STATE.

   b. The CONTRACTOR and the CONTRACTOR'S employees and agents are not by reason of this Contract, agents or employees of the State for any purpose, and the CONTRACTOR and the CONTRACTOR'S employees and agents shall not be entitled to claim or receive from the State any vacation, sick leave, retirement, workers' compensation, unemployment insurance, or other benefits provided to state employees.

   c. The CONTRACTOR shall be responsible for the accuracy, completeness, and adequacy of the CONTRACTOR'S performance under this Contract. Furthermore, the CONTRACTOR intentionally, voluntarily, and knowingly assumes the sole and entire liability to the CONTRACTOR'S employees and agents, and to any individual not a party to this Contract, for all loss, damage, or injury caused by the CONTRACTOR, or the CONTRACTOR'S employees or agents in the course of their employment.

   d. The CONTRACTOR shall be responsible for payment of all applicable federal, state, and county taxes and fees which may become due and owing by the CONTRACTOR by reason of this Contract, including but not limited to (i) income taxes, (ii) employment related fees, assessments, and taxes, and (iii) general excise taxes. The CONTRACTOR also is responsible for obtaining all licenses, permits, and certificates that may be required in order to perform this Contract.

   e. The CONTRACTOR shall obtain a general excise tax license from the Department of Taxation, State of Hawaii, in accordance with section 237-9, HRS, and shall comply with all requirements thereof. The CONTRACTOR shall obtain a tax clearance certificate from the Director of Taxation, State of Hawaii, and the Internal Revenue Service, U.S. Department of the Treasury, showing that all delinquent taxes, if any, levied or accrued under state law and the Internal Revenue Code of 1986, as amended, against the CONTRACTOR have been paid and submit the same to the STATE prior to commencing any performance under this Contract. The CONTRACTOR shall also be solely responsible for meeting all requirements necessary to obtain the tax clearance certificate required for final payment under sections 103-53 and 103D-328, HRS, and paragraph 17 of these General Conditions.

   f. The CONTRACTOR is responsible for securing all employee-related insurance coverage for the CONTRACTOR and the CONTRACTOR'S employees and agents that is or may be required by law, and for payment of all premiums, costs, and other liabilities associated with securing the insurance coverage.

g. The CONTRACTOR shall obtain a certificate of compliance issued by the Department of Labor and Industrial Relations, State of Hawaii, in accordance with section103D-310, HRS, and section 3-122-112, HAR, that is current within six months of the date of issuance.

h. The CONTRACTOR shall obtain a certificate of good standing issued by the Department of Commerce and Consumer Affairs, State of Hawaii, in accordance with section 103D-310, HRS, and section 3-122-112, HAR, that is current within six months of the date of issuance.

i. In lieu of the above certificates from the Department of Taxation, Labor and Industrial Relations, and Commerce and Consumer Affairs, the CONTRACTOR may submit proof of compliance through the State Procurement Office's designated certification process.

3. Personnel Requirements.

a. The CONTRACTOR shall secure, at the CONTRACTOR'S own expense, all personnel required to perform this Contract.

b. The CONTRACTOR shall ensure that the CONTRACTOR'S employees or agents are experienced and fully qualified to engage in the activities and perform the services required under this Contract, and that all applicable licensing and operating requirements imposed or required under federal, state, or county law, and all applicable accreditation and other standards of quality generally accepted in the field of the activities of such employees and agents are complied with and satisfied.

4. Nondiscrimination. No person performing work under this Contract, including any subcontractor, employee, or agent of the CONTRACTOR, shall engage in any discrimination that is prohibited by any applicable federal, state, or county law.

5. Conflicts of Interest. The CONTRACTOR represents that neither the CONTRACTOR, nor any employee or agent of the CONTRACTOR, presently has any interest, and promises that no such interest, direct or indirect, shall be acquired, that would or might conflict in any manner or degree with the CONTRACTOR'S performance under this Contract.

6. Subcontracts and Assignments. The CONTRACTOR shall not assign or subcontract any of the CONTRACTOR'S duties, obligations, or interests under this Contract and no such assignment or subcontract shall be effective unless (i) the CONTRACTOR obtains the prior written consent of the STATE, and (ii) the CONTRACTOR'S assignee or subcontractor submits to the STATE a tax clearance certificate from the Director of Taxation, State of Hawaii, and the Internal Revenue Service, U.S. Department of Treasury, showing that all delinquent taxes, if any, levied or accrued under state law and the Internal Revenue Code of 1986, as amended, against the CONTRACTOR'S assignee or subcontractor have been paid. Additionally, no assignment by the CONTRACTOR of the CONTRACTOR'S right to compensation under this Contract shall be effective unless and until the assignment is approved by the Comptroller of the State of Hawaii, as provided in section 40-58, HRS.

a. Recognition of a successor in interest. When in the best interest of the State, a successor in interest may be recognized in an assignment contract in which the STATE, the CONTRACTOR and the assignee or transferee (hereinafter referred to as the "Assignee") agree that:

(1) The Assignee assumes all of the CONTRACTOR'S obligations;

(2) The CONTRACTOR remains liable for all obligations under this Contract but waives all rights under this Contract as against the STATE; and

(3) The CONTRACTOR shall continue to furnish, and the Assignee shall also furnish, all required bonds.

b. Change of name. When the CONTRACTOR asks to change the name in which it holds this Contract with the STATE, the procurement officer of the purchasing agency (hereinafter referred to as the "Agency procurement officer") shall, upon receipt of a document acceptable or satisfactory to the

Agency procurement officer indicating such change of name (for example, an amendment to the CONTRACTOR'S articles of incorporation), enter into an amendment to this Contract with the CONTRACTOR to effect such a change of name. The amendment to this Contract changing the CONTRACTOR'S name shall specifically indicate that no other terms and conditions of this Contract are thereby changed.

c. Reports. All assignment contracts and amendments to this Contract effecting changes of the CONTRACTOR'S name or novations hereunder shall be reported to the chief procurement officer (CPO) as defined in section 103D-203(a), HRS, within thirty days of the date that the assignment contract or amendment becomes effective.

d. Actions affecting more than one purchasing agency. Notwithstanding the provisions of subparagraphs 6a through 6c herein, when the CONTRACTOR holds contracts with more than one purchasing agency of the State, the assignment contracts and the novation and change of name amendments herein authorized shall be processed only through the CPO's office.

7. Indemnification and Defense. The CONTRACTOR shall defend, indemnify, and hold harmless the State of Hawaii, the contracting agency, and their officers, employees, and agents from and against all liability, loss, damage, cost, and expense, including all attorneys' fees, and all claims, suits, and demands therefore, arising out of or resulting from the acts or omissions of the CONTRACTOR or the CONTRACTOR'S employees, officers, agents, or subcontractors under this Contract. The provisions of this paragraph shall remain in full force and effect notwithstanding the expiration or early termination of this Contract.

8. Cost of Litigation. In case the STATE shall, without any fault on its part, be made a party to any litigation commenced by or against the CONTRACTOR in connection with this Contract, the CONTRACTOR shall pay all costs and expenses incurred by or imposed on the STATE, including attorneys' fees.

9. Liquidated Damages. When the CONTRACTOR is given notice of delay or nonperformance as specified in paragraph 13 (Termination for Default) and fails to cure in the time specified, it is agreed the CONTRACTOR shall pay to the STATE the amount, if any, set forth in this Contract per calendar day from the date set for cure until either (i) the STATE reasonably obtains similar goods or services, or both, if the CONTRACTOR is terminated for default, or (ii) until the CONTRACTOR provides the goods or services, or both, if the CONTRACTOR is not terminated for default. To the extent that the CONTRACTOR'S delay or nonperformance is excused under paragraph 13d (Excuse for Nonperformance or Delay Performance), liquidated damages shall not be assessable against the CONTRACTOR. The CONTRACTOR remains liable for damages caused other than by delay.

10. STATE'S Right of Offset. The STATE may offset against any monies or other obligations the STATE owes to the CONTRACTOR under this Contract, any amounts owed to the State of Hawaii by the CONTRACTOR under this Contract or any other contracts, or pursuant to any law or other obligation owed to the State of Hawaii by the CONTRACTOR, including, without limitation, the payment of any taxes or levies of any kind or nature. The STATE will notify the CONTRACTOR in writing of any offset and the nature of such offset. For purposes of this paragraph, amounts owed to the State of Hawaii shall not include debts or obligations which have been liquidated, agreed to by the CONTRACTOR, and are covered by an installment payment or other settlement plan approved by the State of Hawaii, provided, however, that the CONTRACTOR shall be entitled to such exclusion only to the extent that the CONTRACTOR is current with, and not delinquent on, any payments or obligations owed to the State of Hawaii under such payment or other settlement plan.

11. Disputes. Disputes shall be resolved in accordance with section 103D-703, HRS, and chapter 3-126, Hawaii Administrative Rules ("HAR"), as the same may be amended from time to time.

12. Suspension of Contract. The STATE reserves the right at any time and for any reason to suspend this Contract for any reasonable period, upon written notice to the CONTRACTOR in accordance with the provisions herein.

a. Order to stop performance. The Agency procurement officer may, by written order to the CONTRACTOR, at any time, and without notice to any surety, require the CONTRACTOR to stop all or any part of the performance called for by this Contract. This order shall be for a specified

period not exceeding sixty (60) days after the order is delivered to the CONTRACTOR, unless the parties agree to any further period. Any such order shall be identified specifically as a stop performance order issued pursuant to this section. Stop performance orders shall include, as appropriate: (1) A clear description of the work to be suspended; (2) Instructions as to the issuance of further orders by the CONTRACTOR for material or services; (3) Guidance as to action to be taken on subcontracts; and (4) Other instructions and suggestions to the CONTRACTOR for minimizing costs. Upon receipt of such an order, the CONTRACTOR shall forthwith comply with its terms and suspend all performance under this Contract at the time stated, provided, however, the CONTRACTOR shall take all reasonable steps to minimize the occurrence of costs allocable to the performance covered by the order during the period of performance stoppage. Before the stop performance order expires, or within any further period to which the parties shall have agreed, the Agency procurement officer shall either:

(1) Cancel the stop performance order; or

(2) Terminate the performance covered by such order as provided in the termination for default provision or the termination for convenience provision of this Contract.

b. Cancellation or expiration of the order. If a stop performance order issued under this section is cancelled at any time during the period specified in the order, or if the period of the order or any extension thereof expires, the CONTRACTOR shall have the right to resume performance. An appropriate adjustment shall be made in the delivery schedule or contract price, or both, and the Contract shall be modified in writing accordingly, if:

(1) The stop performance order results in an increase in the time required for, or in the CONTRACTOR'S cost properly allocable to, the performance of any part of this Contract; and

(2) The CONTRACTOR asserts a claim for such an adjustment within thirty (30) days after the end of the period of performance stoppage; provided that, if the Agency procurement officer decides that the facts justify such action, any such claim asserted may be received and acted upon at any time prior to final payment under this Contract.

c. Termination of stopped performance. If a stop performance order is not cancelled and the performance covered by such order is terminated for default or convenience, the reasonable costs resulting from the stop performance order shall be allowable by adjustment or otherwise.

d. Adjustment of price. Any adjustment in contract price made pursuant to this paragraph shall be determined in accordance with the price adjustment provision of this Contract.

13. Termination for Default.

a. Default. If the CONTRACTOR refuses or fails to perform any of the provisions of this Contract with such diligence as will ensure its completion within the time specified in this Contract, or any extension thereof, otherwise fails to timely satisfy the Contract provisions, or commits any other substantial breach of this Contract, the Agency procurement officer may notify the CONTRACTOR in writing of the delay or non-performance and if not cured in ten (10) days or any longer time specified in writing by the Agency procurement officer, such officer may terminate the CONTRACTOR'S right to proceed with the Contract or such part of the Contract as to which there has been delay or a failure to properly perform. In the event of termination in whole or in part, the Agency procurement officer may procure similar goods or services in a manner and upon the terms deemed appropriate by the Agency procurement officer. The CONTRACTOR shall continue performance of the Contract to the extent it is not terminated and shall be liable for excess costs incurred in procuring similar goods or services.

b. CONTRACTOR'S duties. Notwithstanding termination of the Contract and subject to any directions from the Agency procurement officer, the CONTRACTOR shall take timely, reasonable, and

necessary action to protect and preserve property in the possession of the CONTRACTOR in which the STATE has an interest.

c. Compensation. Payment for completed goods and services delivered and accepted by the STATE shall be at the price set forth in the Contract. Payment for the protection and preservation of property shall be in an amount agreed upon by the CONTRACTOR and the Agency procurement officer. If the parties fail to agree, the Agency procurement officer shall set an amount subject to the CONTRACTOR'S rights under chapter 3-126, HAR. The STATE may withhold from amounts due the CONTRACTOR such sums as the Agency procurement officer deems to be necessary to protect the STATE against loss because of outstanding liens or claims and to reimburse the STATE for the excess costs expected to be incurred by the STATE in procuring similar goods and services.

d. Excuse for nonperformance or delayed performance. The CONTRACTOR shall not be in default by reason of any failure in performance of this Contract in accordance with its terms, including any failure by the CONTRACTOR to make progress in the prosecution of the performance hereunder which endangers such performance, if the CONTRACTOR has notified the Agency procurement officer within fifteen (15) days after the cause of the delay and the failure arises out of causes such as: acts of God; acts of a public enemy; acts of the State and any other governmental body in its sovereign or contractual capacity; fires; floods; epidemics; quarantine restrictions; strikes or other labor disputes; freight embargoes; or unusually severe weather. If the failure to perform is caused by the failure of a subcontractor to perform or to make progress, and if such failure arises out of causes similar to those set forth above, the CONTRACTOR shall not be deemed to be in default, unless the goods and services to be furnished by the subcontractor were reasonably obtainable from other sources in sufficient time to permit the CONTRACTOR to meet the requirements of the Contract. Upon request of the CONTRACTOR, the Agency procurement officer shall ascertain the facts and extent of such failure, and, if such officer determines that any failure to perform was occasioned by any one or more of the excusable causes, and that, but for the excusable cause, the CONTRACTOR'S progress and performance would have met the terms of the Contract, the delivery schedule shall be revised accordingly, subject to the rights of the STATE under this Contract. As used in this paragraph, the term "subcontractor" means subcontractor at any tier.

e. Erroneous termination for default. If, after notice of termination of the CONTRACTOR'S right to proceed under this paragraph, it is determined for any reason that the CONTRACTOR was not in default under this paragraph, or that the delay was excusable under the provisions of subparagraph 13d, "Excuse for nonperformance or delayed performance," the rights and obligations of the parties shall be the same as if the notice of termination had been issued pursuant to paragraph 14.

f. Additional rights and remedies. The rights and remedies provided in this paragraph are in addition to any other rights and remedies provided by law or under this Contract.

14. Termination for Convenience.

a. Termination. The Agency procurement officer may, when the interests of the STATE so require, terminate this Contract in whole or in part, for the convenience of the STATE. The Agency procurement officer shall give written notice of the termination to the CONTRACTOR specifying the part of the Contract terminated and when termination becomes effective.

b. CONTRACTOR'S obligations. The CONTRACTOR shall incur no further obligations in connection with the terminated performance and on the date(s) set in the notice of termination the CONTRACTOR will stop performance to the extent specified. The CONTRACTOR shall also terminate outstanding orders and subcontracts as they relate to the terminated performance. The CONTRACTOR shall settle the liabilities and claims arising out of the termination of subcontracts and orders connected with the terminated performance subject to the STATE'S approval. The Agency procurement officer may direct the CONTRACTOR to assign the CONTRACTOR'S right, title, and interest under terminated orders or subcontracts to the STATE. The CONTRACTOR must still complete the performance not terminated by the notice of termination and may incur obligations as necessary to do so.

c. Right to goods and work product. The Agency procurement officer may require the CONTRACTOR to transfer title and deliver to the STATE in the manner and to the extent directed by the Agency procurement officer:

(1) Any completed goods or work product; and

(2) The partially completed goods and materials, parts, tools, dies, jigs, fixtures, plans, drawings, information, and contract rights (hereinafter called "manufacturing material") as the CONTRACTOR has specifically produced or specially acquired for the performance of the terminated part of this Contract.

The CONTRACTOR shall, upon direction of the Agency procurement officer, protect and preserve property in the possession of the CONTRACTOR in which the STATE has an interest. If the Agency procurement officer does not exercise this right, the CONTRACTOR shall use best efforts to sell such goods and manufacturing materials. Use of this paragraph in no way implies that the STATE has breached the Contract by exercise of the termination for convenience provision.

d. Compensation.

(1) The CONTRACTOR shall submit a termination claim specifying the amounts due because of the termination for convenience together with the cost or pricing data, submitted to the extent required by chapter 3-122, HAR, bearing on such claim. If the CONTRACTOR fails to file a termination claim within one year from the effective date of termination, the Agency procurement officer may pay the CONTRACTOR, if at all, an amount set in accordance with subparagraph 14d(3) below.

(2) The Agency procurement officer and the CONTRACTOR may agree to a settlement provided the CONTRACTOR has filed a termination claim supported by cost or pricing data submitted as required and that the settlement does not exceed the total Contract price plus settlement costs reduced by payments previously made by the STATE, the proceeds of any sales of goods and manufacturing materials under subparagraph 14c, and the Contract price of the performance not terminated.

(3) Absent complete agreement under subparagraph 14d(2) the Agency procurement officer shall pay the CONTRACTOR the following amounts, provided payments agreed to under subparagraph 14d(2) shall not duplicate payments under this subparagraph for the following:

(A) Contract prices for goods or services accepted under the Contract;

(B) Costs incurred in preparing to perform and performing the terminated portion of the performance plus a fair and reasonable profit on such portion of the performance, such profit shall not include anticipatory profit or consequential damages, less amounts paid or to be paid for accepted goods or services; provided, however, that if it appears that the CONTRACTOR would have sustained a loss if the entire Contract would have been completed, no profit shall be allowed or included and the amount of compensation shall be reduced to reflect the anticipated rate of loss;

(C) Costs of settling and paying claims arising out of the termination of subcontracts or orders pursuant to subparagraph 14b. These costs must not include costs paid in accordance with subparagraph 14d(3)(B);

(D) The reasonable settlement costs of the CONTRACTOR, including accounting, legal, clerical, and other expenses reasonably necessary for the preparation of settlement claims and supporting data with respect to the terminated portion of the Contract and for the termination of subcontracts thereunder, together with reasonable storage, transportation, and other costs incurred in connection with the protection or disposition of property allocable to the terminated portion of this Contract. The total sum to be paid the CONTRACTOR under this subparagraph shall not exceed the

total Contract price plus the reasonable settlement costs of the CONTRACTOR reduced by the amount of payments otherwise made, the proceeds of any sales of supplies and manufacturing materials under subparagraph 14d(2), and the contract price of performance not terminated.

(4) Costs claimed, agreed to, or established under subparagraphs 14d(2) and 14d(3) shall be in accordance with Chapter 3-123 (Cost Principles) of the Procurement Rules.

15. Claims Based on the Agency Procurement Officer's Actions or Omissions.

a. Changes in scope. If any action or omission on the part of the Agency procurement officer (which term includes the designee of such officer for purposes of this paragraph 15) requiring performance changes within the scope of the Contract constitutes the basis for a claim by the CONTRACTOR for additional compensation, damages, or an extension of time for completion, the CONTRACTOR shall continue with performance of the Contract in compliance with the directions or orders of such officials, but by so doing, the CONTRACTOR shall not be deemed to have prejudiced any claim for additional compensation, damages, or an extension of time for completion; provided:

(1) Written notice required. The CONTRACTOR shall give written notice to the Agency procurement officer:

(A) Prior to the commencement of the performance involved, if at that time the CONTRACTOR knows of the occurrence of such action or omission;

(B) Within thirty (30) days after the CONTRACTOR knows of the occurrence of such action or omission, if the CONTRACTOR did not have such knowledge prior to the commencement of the performance; or

(C) Within such further time as may be allowed by the Agency procurement officer in writing.

(2) Notice content. This notice shall state that the CONTRACTOR regards the act or omission as a reason which may entitle the CONTRACTOR to additional compensation, damages, or an extension of time. The Agency procurement officer, upon receipt of such notice, may rescind such action, remedy such omission, or take such other steps as may be deemed advisable in the discretion of the Agency procurement officer;

(3) Basis must be explained. The notice required by subparagraph 15a(1) describes as clearly as practicable at the time the reasons why the CONTRACTOR believes that additional compensation, damages, or an extension of time may be remedies to which the CONTRACTOR is entitled; and

(4) Claim must be justified. The CONTRACTOR must maintain and, upon request, make available to the Agency procurement officer within a reasonable time, detailed records to the extent practicable, and other documentation and evidence satisfactory to the STATE, justifying the claimed additional costs or an extension of time in connection with such changes.

b. CONTRACTOR not excused. Nothing herein contained, however, shall excuse the CONTRACTOR from compliance with any rules or laws precluding any state officers and CONTRACTOR from acting in collusion or bad faith in issuing or performing change orders which are clearly not within the scope of the Contract.

c. Price adjustment. Any adjustment in the price made pursuant to this paragraph shall be determined in accordance with the price adjustment provision of this Contract.

16. Costs and Expenses. Any reimbursement due the CONTRACTOR for per diem and transportation expenses under this Contract shall be subject to chapter 3-123 (Cost Principles), HAR, and the following guidelines:

a. Reimbursement for air transportation shall be for actual cost or coach class air fare, whichever is less.

b. Reimbursement for ground transportation costs shall not exceed the actual cost of renting an intermediate-sized vehicle.

c. Unless prior written approval of the HOPA is obtained, reimbursement for subsistence allowance (i.e., hotel and meals, etc.) shall not exceed the applicable daily authorized rates for inter-island or out-of-state travel that are set forth in the current Governor's Executive Order authorizing adjustments in salaries and benefits for state officers and employees in the executive branch who are excluded from collective bargaining coverage.

17. Payment Procedures; Final Payment; Tax Clearance.

a. Original invoices required. All payments under this Contract shall be made only upon submission by the CONTRACTOR of original invoices specifying the amount due and certifying that services requested under the Contract have been performed by the CONTRACTOR according to the Contract.

b. Subject to available funds. Such payments are subject to availability of funds and allotment by the Director of Finance in accordance with chapter 37, HRS. Further, all payments shall be made in accordance with and subject to chapter 40, HRS.

c. Prompt payment.

(1) Any money, other than retainage, paid to the CONTRACTOR shall be disbursed to subcontractors within ten (10) days after receipt of the money in accordance with the terms of the subcontract; provided that the subcontractor has met all the terms and conditions of the subcontract and there are no bona fide disputes; and

(2) Upon final payment to the CONTRACTOR, full payment to the subcontractor, including retainage, shall be made within ten (10) days after receipt of the money; provided that there are no bona fide disputes over the subcontractor's performance under the subcontract.

d. Final payment. Final payment under this Contract shall be subject to sections 103-53 and 103D-328, HRS, which require a tax clearance from the Director of Taxation, State of Hawaii, and the Internal Revenue Service, U.S. Department of Treasury, showing that all delinquent taxes, if any, levied or accrued under state law and the Internal Revenue Code of 1986, as amended, against the CONTRACTOR have been paid. Further, in accordance with section 3-122-112, HAR, CONTRACTOR shall provide a certificate affirming that the CONTRACTOR has remained in compliance with all applicable laws as required by this section.

18. Federal Funds. If this Contract is payable in whole or in part from federal funds, CONTRACTOR agrees that, as to the portion of the compensation under this Contract to be payable from federal funds, the CONTRACTOR shall be paid only from such funds received from the federal government, and shall not be paid from any other funds. Failure of the STATE to receive anticipated federal funds shall not be considered a breach by the STATE or an excuse for nonperformance by the CONTRACTOR.

19. Modifications of Contract.

a. In writing. Any modification, alteration, amendment, change, or extension of any term, provision, or condition of this Contract permitted by this Contract shall be made by written amendment to this Contract, signed by the CONTRACTOR and the STATE, provided that change orders shall be made in accordance with paragraph 20 herein.

b. No oral modification. No oral modification, alteration, amendment, change, or extension of any term, provision, or condition of this Contract shall be permitted.

c. Agency procurement officer. By written order, at any time, and without notice to any surety, the Agency procurement officer may unilaterally order of the CONTRACTOR:

(A) Changes in the work within the scope of the Contract; and

(B) Changes in the time of performance of the Contract that do not alter the scope of the Contract work.

d. Adjustments of price or time for performance. If any modification increases or decreases the CONTRACTOR'S cost of, or the time required for, performance of any part of the work under this Contract, an adjustment shall be made and this Contract modified in writing accordingly. Any adjustment in contract price made pursuant to this clause shall be determined, where applicable, in accordance with the price adjustment clause of this Contract or as negotiated.

e. Claim barred after final payment. No claim by the CONTRACTOR for an adjustment hereunder shall be allowed if written modification of the Contract is not made prior to final payment under this Contract.

f. Claims not barred. In the absence of a written contract modification, nothing in this clause shall be deemed to restrict the CONTRACTOR'S right to pursue a claim under this Contract or for a breach of contract.

g. Head of the purchasing agency approval. If this is a professional services contract awarded pursuant to section 103D-303 or 103D-304, HRS, any modification, alteration, amendment, change, or extension of any term, provision, or condition of this Contract which increases the amount payable to the CONTRACTOR by at least $25,000.00 and ten per cent (10%) or more of the initial contract price, must receive the prior approval of the head of the purchasing agency.

h. Tax clearance. The STATE may, at its discretion, require the CONTRACTOR to submit to the STATE, prior to the STATE'S approval of any modification, alteration, amendment, change, or extension of any term, provision, or condition of this Contract, a tax clearance from the Director of Taxation, State of Hawaii, and the Internal Revenue Service, U.S. Department of Treasury, showing that all delinquent taxes, if any, levied or accrued under state law and the Internal Revenue Code of 1986, as amended, against the CONTRACTOR have been paid.

i. Sole source contracts. Amendments to sole source contracts that would change the original scope of the Contract may only be made with the approval of the CPO. Annual renewal of a sole source contract for services should not be submitted as an amendment.

20. Change Order. The Agency procurement officer may, by a written order signed only by the STATE, at any time, and without notice to any surety, and subject to all appropriate adjustments, make changes within the general scope of this Contract in any one or more of the following:

(1) Drawings, designs, or specifications, if the goods or services to be furnished are to be specially provided to the STATE in accordance therewith;

(2) Method of delivery; or

(3) Place of delivery.

a. Adjustments of price or time for performance. If any change order increases or decreases the CONTRACTOR'S cost of, or the time required for, performance of any part of the work under this Contract, whether or not changed by the order, an adjustment shall be made and the Contract modified in writing accordingly. Any adjustment in the Contract price made pursuant to this provision shall be determined in accordance with the price adjustment provision of this Contract. Failure of the parties to agree to an adjustment shall not excuse the CONTRACTOR from proceeding with the Contract as changed, provided that the Agency procurement officer promptly and duly makes the provisional adjustments in payment or time for performance as may be reasonable. By

proceeding with the work, the CONTRACTOR shall not be deemed to have prejudiced any claim for additional compensation, or any extension of time for completion.

b. Time period for claim. Within ten (10) days after receipt of a written change order under subparagraph 20a, unless the period is extended by the Agency procurement officer in writing, the CONTRACTOR shall respond with a claim for an adjustment. The requirement for a timely written response by CONTRACTOR cannot be waived and shall be a condition precedent to the assertion of a claim.

c. Claim barred after final payment. No claim by the CONTRACTOR for an adjustment hereunder shall be allowed if a written response is not given prior to final payment under this Contract.

d. Other claims not barred. In the absence of a change order, nothing in this paragraph 20 shall be deemed to restrict the CONTRACTOR'S right to pursue a claim under the Contract or for breach of contract.

21. Price Adjustment.

a. Price adjustment. Any adjustment in the contract price pursuant to a provision in this Contract shall be made in one or more of the following ways:

(1) By agreement on a fixed price adjustment before commencement of the pertinent performance or as soon thereafter as practicable;

(2) By unit prices specified in the Contract or subsequently agreed upon;

(3) By the costs attributable to the event or situation covered by the provision, plus appropriate profit or fee, all as specified in the Contract or subsequently agreed upon;

(4) In such other manner as the parties may mutually agree; or

(5) In the absence of agreement between the parties, by a unilateral determination by the Agency procurement officer of the costs attributable to the event or situation covered by the provision, plus appropriate profit or fee, all as computed by the Agency procurement officer in accordance with generally accepted accounting principles and applicable sections of chapters 3-123 and 3-126, HAR.

b. Submission of cost or pricing data. The CONTRACTOR shall provide cost or pricing data for any price adjustments subject to the provisions of chapter 3-122, HAR.

22. Variation in Quantity for Definite Quantity Contracts. Upon the agreement of the STATE and the CONTRACTOR, the quantity of goods or services, or both, if a definite quantity is specified in this Contract, may be increased by a maximum of ten per cent (10%); provided the unit prices will remain the same except for any price adjustments otherwise applicable; and the Agency procurement officer makes a written determination that such an increase will either be more economical than awarding another contract or that it would not be practical to award another contract.

23. Changes in Cost-Reimbursement Contract. If this Contract is a cost-reimbursement contract, the following provisions shall apply:

a. The Agency procurement officer may at any time by written order, and without notice to the sureties, if any, make changes within the general scope of the Contract in any one or more of the following:

(1) Description of performance (Attachment 1);

(2) Time of performance (i.e., hours of the day, days of the week, etc.);

(3) Place of performance of services;

(4) Drawings, designs, or specifications when the supplies to be furnished are to be specially manufactured for the STATE in accordance with the drawings, designs, or specifications;

(5) Method of shipment or packing of supplies; or

(6) Place of delivery.

b. If any change causes an increase or decrease in the estimated cost of, or the time required for performance of, any part of the performance under this Contract, whether or not changed by the order, or otherwise affects any other terms and conditions of this Contract, the Agency procurement officer shall make an equitable adjustment in the (1) estimated cost, delivery or completion schedule, or both; (2) amount of any fixed fee; and (3) other affected terms and shall modify the Contract accordingly.

c. The CONTRACTOR must assert the CONTRACTOR'S rights to an adjustment under this provision within thirty (30) days from the day of receipt of the written order. However, if the Agency procurement officer decides that the facts justify it, the Agency procurement officer may receive and act upon a proposal submitted before final payment under the Contract.

d. Failure to agree to any adjustment shall be a dispute under paragraph 11 of this Contract. However, nothing in this provision shall excuse the CONTRACTOR from proceeding with the Contract as changed.

e. Notwithstanding the terms and conditions of subparagraphs 23a and 23b, the estimated cost of this Contract and, if this Contract is incrementally funded, the funds allotted for the performance of this Contract, shall not be increased or considered to be increased except by specific written modification of the Contract indicating the new contract estimated cost and, if this contract is incrementally funded, the new amount allotted to the contract.

24. Confidentiality of Material.

a. All material given to or made available to the CONTRACTOR by virtue of this Contract, which is identified as proprietary or confidential information, will be safeguarded by the CONTRACTOR and shall not be disclosed to any individual or organization without the prior written approval of the STATE.

b. All information, data, or other material provided by the CONTRACTOR to the STATE shall be subject to the Uniform Information Practices Act, chapter 92F, HRS.

25. Publicity. The CONTRACTOR shall not refer to the STATE, or any office, agency, or officer thereof, or any state employee, including the HOPA, the CPO, the Agency procurement officer, or to the services or goods, or both, provided under this Contract, in any of the CONTRACTOR'S brochures, advertisements, or other publicity of the CONTRACTOR. All media contacts with the CONTRACTOR about the subject matter of this Contract shall be referred to the Agency procurement officer.

26. Ownership Rights and Copyright. The STATE shall have complete ownership of all material, both finished and unfinished, which is developed, prepared, assembled, or conceived by the CONTRACTOR pursuant to this Contract, and all such material shall be considered "works made for hire." All such material shall be delivered to the STATE upon expiration or termination of this Contract. The STATE, in its sole discretion, shall have the exclusive right to copyright any product, concept, or material developed, prepared, assembled, or conceived by the CONTRACTOR pursuant to this Contract.

27. Liens and Warranties. Goods provided under this Contract shall be provided free of all liens and provided together with all applicable warranties, or with the warranties described in the Contract documents, whichever are greater.

28. Audit of Books and Records of the CONTRACTOR. The STATE may, at reasonable times and places, audit the books and records of the CONTRACTOR, prospective contractor, subcontractor, or prospective subcontractor which are related to:

a. The cost or pricing data, and

b. A state contract, including subcontracts, other than a firm fixed-price contract.

29. Cost or Pricing Data. Cost or pricing data must be submitted to the Agency procurement officer and timely certified as accurate for contracts over $100,000 unless the contract is for a multiple-term or as otherwise specified by the Agency procurement officer. Unless otherwise required by the Agency procurement officer, cost or pricing data submission is not required for contracts awarded pursuant to competitive sealed bid procedures.

If certified cost or pricing data are subsequently found to have been inaccurate, incomplete, or noncurrent as of the date stated in the certificate, the STATE is entitled to an adjustment of the contract price, including profit or fee, to exclude any significant sum by which the price, including profit or fee, was increased because of the defective data. It is presumed that overstated cost or pricing data increased the contract price in the amount of the defect plus related overhead and profit or fee. Therefore, unless there is a clear indication that the defective data was not used or relied upon, the price will be reduced in such amount.

30. Audit of Cost or Pricing Data. When cost or pricing principles are applicable, the STATE may require an audit of cost or pricing data.

31. Records Retention.

(1) Upon any termination of this Contract or as otherwise required by applicable law, CONTRACTOR shall, pursuant to chapter 487R, HRS, destroy all copies (paper or electronic form) of personal information received from the STATE.

(2) The CONTRACTOR and any subcontractors shall maintain the files, books, and records that relate to the Contract, including any personal information created or received by the CONTRACTOR on behalf of the STATE, and any cost or pricing data, for at least three (3) years after the date of final payment under the Contract. The personal information shall continue to be confidential and shall only be disclosed as permitted or required by law. After the three (3) year, or longer retention period as required by law has ended, the files, books, and records that contain personal information shall be destroyed pursuant to chapter 487R, HRS or returned to the STATE at the request of the STATE.

32. Antitrust Claims. The STATE and the CONTRACTOR recognize that in actual economic practice, overcharges resulting from antitrust violations are in fact usually borne by the purchaser. Therefore, the CONTRACTOR hereby assigns to STATE any and all claims for overcharges as to goods and materials purchased in connection with this Contract, except as to overcharges which result from violations commencing after the price is established under this Contract and which are not passed on to the STATE under an escalation clause.

33. Patented Articles. The CONTRACTOR shall defend, indemnify, and hold harmless the STATE, and its officers, employees, and agents from and against all liability, loss, damage, cost, and expense, including all attorneys fees, and all claims, suits, and demands arising out of or resulting from any claims, demands, or actions by the patent holder for infringement or other improper or unauthorized use of any patented article, patented process, or patented appliance in connection with this Contract. The CONTRACTOR shall be solely responsible for correcting or curing to the satisfaction of the STATE any such infringement or improper or unauthorized use, including, without limitation: (a) furnishing at no cost to the STATE a substitute article, process, or appliance acceptable to the STATE, (b) paying royalties or other required payments to the patent holder, (c) obtaining proper authorizations or releases from the patent holder, and (d) furnishing such security to or making such arrangements with the patent holder as may be necessary to correct or cure any such infringement or improper or unauthorized use.

34. Governing Law. The validity of this Contract and any of its terms or provisions, as well as the rights and duties of the parties to this Contract, shall be governed by the laws of the State of Hawaii. Any action at law or in equity to enforce or interpret the provisions of this Contract shall be brought in a state court of competent jurisdiction in Honolulu, Hawaii.

35. Compliance with Laws. The CONTRACTOR shall comply with all federal, state, and county laws, ordinances, codes, rules, and regulations, as the same may be amended from time to time, that in any way affect the CONTRACTOR'S performance of this Contract.

36. Conflict Between General Conditions and Procurement Rules. In the event of a conflict between the General Conditions and the procurement rules, the procurement rules in effect on the date this Contract became effective shall control and are hereby incorporated by reference.

37. Entire Contract. This Contract sets forth all of the agreements, conditions, understandings, promises, warranties, and representations between the STATE and the CONTRACTOR relative to this Contract. This Contract supersedes all prior agreements, conditions, understandings, promises, warranties, and representations, which shall have no further force or effect. There are no agreements, conditions, understandings, promises, warranties, or representations, oral or written, express or implied, between the STATE and the CONTRACTOR other than as set forth or as referred to herein.

38. Severability. In the event that any provision of this Contract is declared invalid or unenforceable by a court, such invalidity or unenforceability shall not affect the validity or enforceability of the remaining terms of this Contract.

39. Waiver. The failure of the STATE to insist upon the strict compliance with any term, provision, or condition of this Contract shall not constitute or be deemed to constitute a waiver or relinquishment of the STATE'S right to enforce the same in accordance with this Contract. The fact that the STATE specifically refers to one provision of the procurement rules or one section of the Hawaii Revised Statutes, and does not include other provisions or statutory sections in this Contract shall not constitute a waiver or relinquishment of the STATE'S rights or the CONTRACTOR'S obligations under the procurement rules or statutes.

40. Pollution Control. If during the performance of this Contract, the CONTRACTOR encounters a "release" or a "threatened release" of a reportable quantity of a "hazardous substance," "pollutant," or "contaminant" as those terms are defined in section 128D-1, HRS, the CONTRACTOR shall immediately notify the STATE and all other appropriate state, county, or federal agencies as required by law. The Contractor shall take all necessary actions, including stopping work, to avoid causing, contributing to, or making worse a release of a hazardous substance, pollutant, or contaminant, and shall promptly obey any orders the Environmental Protection Agency or the state Department of Health issues in response to the release. In the event there is an ensuing cease-work period, and the STATE determines that this Contract requires an adjustment of the time for performance, the Contract shall be modified in writing accordingly.

41. Campaign Contributions. The CONTRACTOR is hereby notified of the applicability of 11-355, HRS, which states that campaign contributions are prohibited from specified state or county government contractors during the terms of their contracts if the contractors are paid with funds appropriated by a legislative body.

42. Confidentiality of Personal Information.

a. Definitions.

"Personal information" means an individual's first name or first initial and last name in combination with any one or more of the following data elements, when either name or data elements are not encrypted:

(1) Social security number;

(2) Driver's license number or Hawaii identification card number; or

(3) Account number, credit or debit card number, access code, or password that would permit access to an individual's financial information.

Personal information does not include publicly available information that is lawfully made available to the general public from federal, state, or local government records.

"Technological safeguards" means the technology and the policy and procedures for use of the technology to protect and control access to personal information.

b. Confidentiality of Material.

(1) All material given to or made available to the CONTRACTOR by the STATE by virtue of this Contract which is identified as personal information, shall be safeguarded by the CONTRACTOR and shall not be disclosed without the prior written approval of the STATE.

(2) CONTRACTOR agrees not to retain, use, or disclose personal information for any purpose other than as permitted or required by this Contract.

(3) CONTRACTOR agrees to implement appropriate "technological safeguards" that are acceptable to the STATE to reduce the risk of unauthorized access to personal information.

(4) CONTRACTOR shall report to the STATE in a prompt and complete manner any security breaches involving personal information.

(5) CONTRACTOR agrees to mitigate, to the extent practicable, any harmful effect that is known to CONTRACTOR because of a use or disclosure of personal information by CONTRACTOR in violation of the requirements of this paragraph.

(6) CONTRACTOR shall complete and retain a log of all disclosures made of personal information received from the STATE, or personal information created or received by CONTRACTOR on behalf of the STATE.

c. Security Awareness Training and Confidentiality Agreements.

(1) CONTRACTOR certifies that all of its employees who will have access to the personal information have completed training on security awareness topics relating to protecting personal information.

(2) CONTRACTOR certifies that confidentiality agreements have been signed by all of its employees who will have access to the personal information acknowledging that:

(A) The personal information collected, used, or maintained by the CONTRACTOR will be treated as confidential;

(B) Access to the personal information will be allowed only as necessary to perform the Contract; and

(C) Use of the personal information will be restricted to uses consistent with the services subject to this Contract.

d. Termination for Cause. In addition to any other remedies provided for by this Contract, if the STATE learns of a material breach by CONTRACTOR of this paragraph by CONTRACTOR, the STATE may at its sole discretion:

(1) Provide an opportunity for the CONTRACTOR to cure the breach or end the violation; or

(2) Immediately terminate this Contract.

In either instance, the CONTRACTOR and the STATE shall follow chapter 487N, HRS, with respect to notification of a security breach of personal information.

e. Records Retention.

(1) Upon any termination of this Contract or as otherwise required by applicable law, CONTRACTOR shall, pursuant to chapter 487R, HRS, destroy all copies (paper or electronic form) of personal information received from the STATE.

(2) The CONTRACTOR and any subcontractors shall maintain the files, books, and records that relate to the Contract, including any personal information created or received by the CONTRACTOR on behalf of the STATE, and any cost or pricing data, for at least three (3) years after the date of final payment under the Contract. The personal information shall continue to be confidential and shall only be disclosed as permitted or required by law. After the three (3) year, or longer retention period as required by law has ended, the files, books, and records that contain personal information shall be destroyed pursuant to chapter 487R, HRS or returned to the STATE at the request of the STATE.

Department of Hawaiian Home Lands
CONSTRUCTION GENERAL CONDITIONS
Dated March 2014

TABLE OF CONTENTS

ARTICLE/SECTION **PAGE**

ARTICLE 1: DEFINITIONS AND ABRREVIATIONS

1.1 DEFINITIONS....4
1.2 ABBREVIATIONS....8

ARTICLE 2 (reserved)

ARTICLE 3: CONTRACT

3.1 NOTICE TO PROCEED....9
3.2 RELATIONSHIP OF PARTIES....9
3.3 PERSONNEL REQUIREMENTS....10
3.4 NON-DISCRIMINATION....10
3.5 CONFLICTS OF INTEREST....10
3.6 EMPLOYMENT OF STATE RESIDENTS (§103B-3 HRS)....10

ARTICLE 4: SCOPE OF WORK

4.1 INTENT OF CONTRACT, DUTY OF CONTRACTOR....11
4.2 CHANGES....11
4.3 DUTY OF CONTRACTOR TO PROVIDE PROPOSAL FOR CHANGES....12
4.4 PRICE ADJUSTMENT (§3-125-13 HAR)....13
4.5 ALLOWANCES FOR OVERHEAD AND PROFIT (§3-125-13 HAR)....13
4.6 PAYMENT FOR DELETED MATERIAL....14
4.7 VARIATIONS IN ESTIMATED QUANTITIES (§3-125-10 HAR)....14
4.8 VARIATIONS IN BOTTOM ELEVATIONS....14
4.9 DIFFERING SITE CONDITIONS (§3-125-11 HAR)....15
4.10 COSTS AND EXPENSES....15

ARTICLE 5: CONTROL OF WORK

5.1 AUTHORITY OF THE CHAIRMAN, HAWAIIAN HOMES COMMISSION....16
5.2 AUTHORITY OF THE PROJECT MANAGER....16
5.3 AUTHORITY OF THE INSPECTOR....16
5.4 AUTHORITY OF CONSULTANT(S)....16
5.5 SHOP DRAWINGS AND OTHER SUBMITTALS....16
5.6 COORDINATION OF CONTRACT DOCUMENTS....19
5.7 INTERPRETATION OF DRAWINGS AND SPECIFICATIONS....21
5.8 EXAMINATION OF DRAWINGS, SPECIFICATIONS, PROJECT SITE....21

5.9 COOPERATION BETWEEN THE CONTRACTOR AND THE DEPARTMENT 21
5.10 INSPECTION 23
5.11 REMOVAL OF DEFECTIVE, NON-CONFORMING AND UNAUTHORIZED WORK.....23
5.12 VALUE ENGINEERING INCENTIVE.....24
5.13 SUBCONTRACTS 26

ARTICLE 6: CONTROL OF MATERIALS AND EQUIPMENT

6.1 MATERIALS AND EQUIPMENT 28
6.2 SOURCE OF SUPPLY AND QUALITY OF MATERIALS 28
6.3 SUBSTITUTION OF MATERIALS AND EQUIPMENT AFTER BID OPENING 28
6.4 ASBESTOS CONTAINING MATERIALS.....29
6.5 TEST SAMPLES 29
6.6 MATERIAL SAMPLES 29
6.7 NON-CONFORMING MATERIALS.....30
6.8 HANDLING MATERIALS.....30
6.9 STORAGE OF MATERIALS 30
6.10 PROPERTY RIGHTS IN MATERIALS.....30
6.11 ANTI-TRUST CLAIMS 30

ARTICLE 7: PROSECUTION AND PROGRESS

7.1 PROSECUTION OF THE WORK.....31
7.2 COMMENCEMENT REQUIREMENTS 31
7.3 INSURANCE REQUIREMENTS.....32
7.4 PERMITS AND LICENSES 34
7.5 NORMAL WORKING HOURS 34
7.6 HOURS OF LABOR (§104-2 HRS).....34
7.7 PREVAILING WAGES (§104-2 HRS & FEDERAL DAVIS-BACON).....35
7.8 FAILURE TO PAY REQUIRED WAGES (§104-4 HRS OR FEDERAL DAVIS-BACON).....36
7.9 PAYROLLS AND PAYROLL RECORDS (§104-3 HRS) 36
7.10 OVERTIME AND NIGHT WORK.....36
7.11 OVERTIME AND NIGHT PAYMENT FOR DEPARTMENT INSPECTION SERVICE.....37
7.12 LIMITATIONS OF OPERATIONS.....37
7.13 ASSIGNMENT OR CHANGE OF NAME (§3-125-14 HAR).....38
7.14 LAWS TO BE OBSERVED.....39
7.15 PATENTED DEVICES, MATERIALS AND PROCESSES 39
7.16 SANITARY, HEALTH AND SAFETY PROVISOINS 40
7.17 PROTECTION OF PERSONS AND PROPERTY 40
7.18 ARCHAEOLOGICAL SITES 41
7.19 RESPONSIBILITY FOR DAMAGE CLAIMS; INDEMNITY 41
7.20 CHARACTER OF WORKERS OR EQUIPMENT 42
7.21 CONTRACT TIME 43
7.22 CONSTRUCTION SCHEDULE.....46
7.23 STATEMENT OF WORKING DAYS 46

7.24 SUSPENSION OF WORK (§3-125-7 HAR) 46
7.25 DISPUTES AND CLAIMS (§3-126-3 HAR) 48
7.26 FAILURE TO COMPLETE THE WORK ON TIME....50
7.27 TERMINATION OF CONTRACTOR FOR CAUSE (§3-125-18 HAR)....51
7.28 TERMINATION FOR CONVENIENCE (§3-125-22 HAR)....52
7.29 CORRECTING DEFECTS....53
7.30 FINAL CLEANING 53
7.31 SUBSTANTIAL COMPLETION AND FINAL INSPECTION....53
7.32 PROJECT ACCEPTANCE DATE....54
7.33 FINAL SETTLEMENT OF CONTRACT 55
7.34 CONTRACTOR'S RESPONSIBILITY FOR WORK; RISK OF LOSS....56
7.35 GUARANTEE OF WORK....56
7.36 WORK OF AND CHARGES BY UTILITIES 57
7.37 RIGHT TO AUDIT RECORDS 57
7.38 RECORDS MAINTENANCE, RETENTION AND ACCESS....58
7.39 COST OR PRICING DATA....58
7.40 CONFIDENTIALITY OF MATERIAL....58
7.41 PUBLICITY....59
7.42 OWNERSHIP RIGHTS AND COPYRIGHT 59
7.43 GOVERNING LAW....59
7.44 SEVERABILITY 59
7.45 WAIVER....59
7.46 UTILITIES AND SERVICES 59

ARTICLE 8: MEASUREMENT AND PAYMENT

8.1 MEASUREMENT OF QUANTITIES 61
8.2 NO WAIVER OF LEGAL RIGHTS 61
8.3 PAYMENT FOR ADDITIONAL WORK 61
8.4 PROGRESS AND/OR PARTIAL PAYMENTS 65
8.5 PROMPT PAYMENT (§3-125-23 HAR) 66
8.6 RETAINAGE....67
8.7 WARRANTY OF CLEAR TITLE 67
8.8 FINAL PAYMENT 68
8.9 STATE'S RIGHT TO OFFSET....68

ARTICLE 1: DEFINITIONS AND ABBREVIATIONS

1.1 DEFINITIONS. Whenever the following terms or pronouns are used in these Construction General Conditions, or in any contract documents or instruments where these Construction General Conditions govern, the intent and meaning shall be interpreted as follows:

ADDENDUM (plural - Addenda). A written or graphic document, including Drawings and Specifications, issued by the Chairman during the bidding period which modifies or interprets the bidding documents, by additions, deletions, clarifications or corrections, which shall be considered and made a part of the bid proposal and the contract.

ADDITION (to the contract sum). Amount added to the contract sum by Change Order.

ADMINISTRATIVE RULES. Hawaii Administrative Rules for Chapter 103-D of the Hawaii Revised Statutes.

ADVERTISEMENT. A public announcement inviting bids for work to be performed or materials to be furnished.

BAD WEATHER DAY. When weather or other conditions prevent a minimum of four hours of work with the Contractor's normal work force on controlling items of work at the site. (See excess bad weather day.)

BENEFICIAL OCCUPANCY. The point of project completion when the Department can use the constructed facility in whole or in part for its intended purpose even though substantial completion may not be achieved.

BID. See PROPOSAL.

BID SECURITY. The security furnished by the Bidder from which the Department may recover its damages in the event the Bidder breaches its promise to enter into a contract with the Department and fails to execute the required bonds covering the work contemplated, if its proposal is accepted.

BIDDER. Any individual, partnership, firm, corporation, joint venture, or other legal entity submitting, directly or through a duly authorized representative or agent, a proposal for the work contemplated.

BIDDING DOCUMENTS. The advertisement "Notice to Contractors", or invitation to bid, instructions to Bidders, proposal requirements, the bid form and the proposed Contract Documents including all addenda issued prior to receipt of Bids.

BULLETIN. A written notice to the Contractor requesting a price and / or time proposal for contemplated changes preparatory to the issuance of a field order or change order.

BY OR TO THE PROJECT MANAGER. To avoid cumbersome and confusing repetition of expressions in these General Conditions, it is provided that whenever the following words or words of like import are used, they shall be understood as if they were followed by the words "by the Project Manager" or "to the Project Manager", unless the context clearly indicates another meaning: contemplated, required, determined, directed, specified, authorized, ordered, given, designated, indicated, considered necessary, deemed necessary, permitted, reserved, suspended, established, approval, approved, disapproved, acceptable, unacceptable, suitable, accepted, satisfactory, unsatisfactory, sufficient, insufficient, rejected or condemned.

CALENDAR DAY. Any day shown on the calendar beginning at midnight and ending at midnight the following day. If no designation of calendar or working day is made, "day" shall mean calendar day.

CHAIRMAN. The Chairman of the Hawaiian Homes Commission, Department of Hawaiian Home Lands.

CHANGE ORDER. A written order signed by the Chairman that establishes the full payment and final settlement of all claims for direct, indirect and consequential costs, including costs of delays, and establishes any adjustments to contract time related to the work covered and affected by one or more field orders, or for change work done or agreed to be done without issuance of a separate field order. A change order signed by all the parties to the contract constitutes a supplemental agreement.

COMPLETION. See SUBSTANTIAL COMPLETION and FINAL COMPLETION.

CONSULTANT. A person, firm or corporation having a contract with the Department to furnish services with respect to the project.

CONTRACT. The written agreement between the Contractor and the Department by its Chairman, by which the Contractor is bound to furnish all labor, equipment, and materials and to perform the specified work within the contract time stipulated, and by which DHHL is obligated to compensate the Contractor therefor at the prices set forth therein. The contract shall include the Contract Documents, also any and all amendments, and change orders, which are required to complete the construction in an acceptable manner.

CONTRACT COMPLETION DATE. The calendar day on which all work on the project, required by the contract, must be completed. See CONTRACT TIME and FINAL COMPLETION.

CONTRACT DOCUMENTS. The Contract, Addenda (which pertain to the Contract Documents, Contractor's Proposal (including Wage Schedule, List of Subcontractors and other documentation accompanying the Bid and any post bid documentation submitted prior to the Notice of Award) when attached as an exhibit to the contract, the Notice to Proceed, the Bonds, these General Conditions, the SPECIAL CONDITIONS, the Specifications and the Drawings as the same are more specifically identified in the contract together with all written Amendments, Change Orders, Field Orders, any written order for minor changes in the work and Project Manager's written interpretations and clarifications issued on or after the effective date of the contract.

CONTRACT PRICE. The amount designated on the face of the contract for the performance of work including allowances, if any.

CONTRACT TIME. The number of working or calendar days provided in the contract for completion of the contract, exclusive of authorized time extensions. The number of days shall begin running on the effective date in the Notice to Proceed. If in lieu of providing a number of working or calendar days, the contract requires completion by a certain date, the work shall be completed by that date.

CONTRACTOR. Any individual, partnership, firm, corporation, joint venture, or other legal entity undertaking the execution of the work under the terms of the contract with the State of Hawaii, and acting directly or through its agents, or employees.

DEPARTMENT. The Department of Hawaiian Home Lands (abbreviated DHHL).

DRAWINGS (or Plans). The contract drawings in graphic or pictorial form, which show the design, location, character, dimensions and details of the work to be done and which shall be a part of the Contract Documents.

EQUAL OR APPROVED EQUAL. Whenever this term is used in the drawings or specifications, it shall be interpreted to mean a brand or article, prequalified in accordance with Section 6.3 SUBSTITUTION OF MATERIALS AND EQUIPMENT AFTER BID OPENING, that may be used in place of the one specified.

EXCESS BAD WEATHER DAY. A working day on which inclement weather prevents work on the contract and is beyond the average weather for the location of the project and the time of the year.

FIELD ORDER. A written order issued by the Project Manager to the Contractor requiring the contract work to be performed in accordance with a change or changes in the work. A field order may (1) establish a price adjustment and/or time adjustment in an amount the Project Manager believes is reasonable for the change; or (2) may declare that the Project Manager does not intend to adjust contract time or price for the work; or (3) may request the Contractor to submit a proposal for an adjustment to the contract time and/or price by a certain date.

FINAL COMPLETION. The date set by the Chairman that all work required by the contract and any amendments or changes thereto is in full compliance with the contract.

FORCE ACCOUNT. Term used when work is ordered to be done at the sole option of the Department and is to be billed for at cost of labor, materials and equipment, insurance(s), taxes, etc., plus a percentage for overhead and profit.

GUARANTEE. Legally enforceable assurance of the duration of satisfactory performance of quality of a product or work.

HAZARDOUS MATERIALS. Any and all radioactive materials, asbestos, polychlorinated biphenyls, petroleum, crude oil, chemicals known to cause cancer or reproductive toxicity, pollutants, contaminants, toxic substances or materials cited in Hazardous Material Laws. Abandoned motor vehicles or parts thereof are not hazardous material.

HOLIDAYS. The days of each year which are set apart and established as State holidays pursuant to Chapter 8, Hawaii Revised Statutes.

INSPECTOR. The person assigned by the Department to make detailed inspections of contract performance and materials supplied for the work.

LAWS. All Federal, State, City and County Laws, ordinances, rules and regulations, and standard specifications, including any amendments thereto effective as of the date of the call for sealed bids.

LETTER OF AWARD. A written notice from the Chairman to the successful Bidder(s) stating that the Department has accepted its proposal.

LIQUIDATED DAMAGES. The amount prescribed in the Special Conditions, LIQUIDATED DAMAGES to be paid to the Department or to be deducted from any payments due or to become due the Contractor for each working day or calendar day (as applicable) delay in completing the whole or any specified portion of the work beyond the Contract Time.

MAJOR UNIT PRICE ITEM. A unit price item which, when extended on its estimated quantities in the proposal form, exceeds five percent (5%) of the total base bid proposal less any allowance and contingent items included in the proposal.

NON-CONFORMING WORK. Work that does not meet the requirements of the Contract Documents.

NOTICE TO PROCEED. A written notice from the Project Manager to the Contractor advising it of the date on which it is to begin the prosecution of the work, which date shall also be the beginning of Contract Time.

POST CONTRACT DRAWINGS. Drawings issued after the award of the contract for the purpose of clarification and / or changes to the work indicated in the original drawings and which may be made a part of the contract.

PROJECT ACCEPTANCE DATE. The calendar day on which the Project Manager accepts the project as sufficiently completed in compliance with the contract so that the Department can occupy or utilize the work for its intended use. See SUBSTANTIAL COMPLETION.

PROJECT CONTRACT LIMITS (or CONTRACT ZONE). The portion of the site as delineated on the drawings which define the Contractor's primary area of operation for the prosecution of the work. It does not define the exact limits of all construction that may be required under the contract.

PROJECT MANAGER. The Department's Contract Administrator as described in ARTICLE 5, CONTROL OF WORK.

PROJECT GUARANTEE. A guarantee issued by the Contractor to the Department. See GUARANTEE.

PROPOSAL (BID). The executed document submitted by a Bidder in the prescribed manner, in response to a request for proposals or invitation to Bid, to perform at the prices quoted, for the work specified under the contract, within the time prescribed for performance.

PROPOSAL FORM. The form prepared by the Department on which the written offer or formal bid for the work to be done is submitted by the Bidder. By submitting a bid on the proposal form, a Bidder adopts the language therein as its own.

PUNCHLIST. A list compiled by the Project Manager (or Contractor) stating work yet to be completed or corrected by the Contractor in order to substantially complete or finally complete the contract requirements.

SHOP DRAWINGS/SUBMITTALS. All drawings, diagrams illustrations, schedules and other data or information which are prepared or assembled by the Contractor and submitted by Contractor to illustrate some portion of the work.

SPECIAL CONDITIONS. The specific clauses that supplements or modify the standard clauses of the GENERAL CONDITIONS setting forth conditions or requirements peculiar to the individual project under consideration, which are not thoroughly or satisfactorily covered, described or explained in these GENERAL CONDITIONS.

SPECIFICATIONS. That portion of the Contract Documents consisting of written descriptions for materials, equipment, construction systems, standards, workmanship, directions, provisions and

requirements that pertain to the method and manner of performing the work and certain administrative requirements applicable thereto.

STATE. The State of Hawaii acting through its authorized representative.

SUBCONTRACT. Any written agreement between the Contractor and its subcontractors which contains the conditions under which the subcontractor is to perform a portion of the work for the Contractor.

SUBCONTRACTOR. An individual, partnership, firm, corporation, joint venture or other legal entity, as covered in Chapter 444, Hawaii Revised Statutes, which enters into an agreement with the Contractor to perform a portion of the work for the Contractor.

SUBSTANTIAL COMPLETION. The status of the project when the Contractor has completed all the work and (1) all utilities and services are connected and working; (2) all equipment is in acceptable working condition; (3) additional activity by the Contractor to correct punchlist items as described herein will not prevent or disrupt use of the work or the facility in which the work is located; and 4) the building, structure, improvement or facility can be used for its intended purpose.

SUPERINTENDENT. The employee of the Contractor, authorized to receive and fulfill instructions from the Project Manager, who is charged with the responsibility of all the work.

SURETY. The qualified individual, firm or corporation other than the Contractor, which executes a bond with and for the Contractor to ensure its acceptable performance of the contract.

UNUSUALLY SEVERE WEATHER. Uncommonly harsh weather including but not limited to hurricanes, tornadoes, tropical storms and tropical depressions.

WORK. The furnishing of all labor, materials, equipment, and other incidentals necessary or convenient for the successful completion of the project and the execution of all the duties and obligations imposed by the contract.

WORKING DAY. A calendar day, exclusive of Saturdays, Sundays and State-recognized legal holidays for the month in question.

1.2 ABBREVIATIONS

DHHL	Department of Hawaiian Home Lands.
HAR	Hawaii Administrative Rules
HRS	Hawaii Revised Statutes
VECP	Value Engineering Cost Proposal

~ END OF ARTICLE 1~

ARTICLE 2: [reserved]

ARTICLE 3: CONTRACT

3.1 NOTICE TO PROCEED

3.1.1 After the contract is fully executed and signed by the Chairman, the Contractor will be sent a formal Notice to Proceed letter advising the Contractor of the date on which it may proceed with the work. The Contractor shall be allowed ten (10) consecutive working days from said date to begin its work. In the event that the Contractor refuses or neglects to start the work, the Chairman may terminate the contract in accordance with Section 7.27, TERMINATION OF CONTRACT FOR CAUSE.

3.1.2 The Contractor may commence its operations strictly at its own risk prior to receipt of the formal notice to proceed, provided it makes a written request and has received approval from the Chairman in writing. All work performed shall be conducted in accordance with Section 7.1, PROSECUTION OF THE WORK.

3.1.3 In certain cases, the Department, with agreement of the Contractor, may issue a Notice to Proceed before full execution of the contract by the Chairman and it may further issue a Notice to Proceed concurrently with the Notice of Award.

3.1.4 In the event the Notice to Proceed is not issued within one hundred eighty (180) days after (1) the date the contract is executed by all parties; or (2) for projects funded with State Capital Improvement Project (CIP) funds, the date that the written certificate that funds are available is issued, whichever is later, the Contractor may submit a claim for increased labor and material costs (but not overhead costs) which are directly attributable to the delay beyond the first one hundred eighty (180) days. Such claims shall be accompanied with the necessary documentation to justify the claim. No payment will be made for assumed escalation costs.

3.2 RELATIONSHIP OF PARTIES. Independent Contractor Status and Responsibilities, including Tax Responsibilities.

3.2.1 In the performance of services required under this Contract, the CONTRACTOR is an "independent contractor," with the authority and responsibility to control and direct the performance and details of the work and services required under this Contract; however, the STATE shall have a general right to inspect work in progress to determine whether, in the STATE's opinion, the services are being performed by the CONTRACTOR in compliance with this Contract. Unless otherwise provided by special condition, it is understood that the STATE does not agree to use the CONTRACTOR exclusively, and that the CONTRACTOR is free to contract to provide services to other individuals or entities while under contract with the STATE.

3.2.2 The CONTRACTOR and the CONTRACTOR's employees and agents are not by reason of this Contract, agents or employees of the State for any purpose, and the CONTRACTOR and the CONTRACTOR's employees and agents shall not be entitled to claim or receive from the STATE any vacation, sick leave, retirement, workers' compensation, unemployment insurance, or other benefits provided to state employees.

3.2.3 The CONTRACTOR shall be responsible for the accuracy, completeness, and adequacy of the CONTRACTOR's performance under this Contract. Furthermore, the CONTRACTOR intentionally, voluntarily, and knowingly assumes the sole and entire liability to the CONTRACTOR's employees

and agents, and to any individual not a party to this Contract, for all loss, damage, or injury caused by the CONTRACTOR, or the CONTRACTOR's employees or agents in the course of their employment.

3.2.4 The CONTRACTOR shall be responsible for payment of all applicable federal, state, and county taxes and fees which may become due and owing by the CONTRACTOR by reason of this Contract, including but not limited to (i) income taxes, (ii) employment related fees, assessments, and taxes, and (iii) general excise taxes. The CONTRACTOR also is responsible for obtaining all licenses, permits, and certificates that may be required in order to perform this Contract.

3.2.5 The CONTRACTOR shall obtain a general excise tax license from the Department of Taxation, State of Hawaii, in accordance with Section 237-9, HRS, and shall comply with all requirements thereof.

2.2.6 The CONTRACTOR is responsible for securing all employee-related insurance coverage for the CONTRACTOR and the CONTRACTOR's employees and agents that is or may be required by law, and for payment of all premiums, costs, and other liabilities associated with securing the insurance coverage.

3.3 PERSONNEL REQUIREMENTS:

3.3.1 The CONTRACTOR shall secure, at the CONTRACTOR's own expense, all personnel required to perform this Contract.

3.3.2 The CONTRACTOR shall ensure that the CONTRACTOR's employees or agents are experienced and fully qualified to engage in the activities and perform the services required under this Contract, and that all applicable licensing and operating requirements imposed or required under federal, state, or county law, and all applicable accreditation and other standards of quality generally accepted in the field of the activities of such employees and agents are complied with and satisfied.

3.4 NONDISCRIMINATION. No person performing work under this Contract, including any subcontractor, employee, or agent of the Contractor, shall engage in any discrimination that is prohibited by any applicable federal, state, or county law.

3.5 CONFLICTS OF INTEREST. The CONTRACTOR represents that neither the CONTRACTOR, nor any employee or agent of the CONTRACTOR, presently has any interest, and promises that no such interest, direct or indirect, shall be acquired, that would or might conflict in any manner or degree with the CONTRACTOR's performance under this Contract.

3.6 EMPLOYMENT OF STATE RESIDENTS (§103B-3 HRS). The Contractor shall ensure that Hawaii residents comprise not less than eighty per cent of the workforce employed to perform the contract work on the project. The 80% requirement shall be determined by dividing the total number of hours worked on the contract by Hawaii residents, by the total number of hours worked on the contract by all employees of the Contractor in the performance of the contract. The hours worked by any Subcontractor of the Contractor shall count towards the calculation for this section. The hours worked by employees within shortage trades, as determined by the Department of Labor and Industrial Relations (DLIR), shall not be included in the calculation for this section.

~END OF ARTICLE 3~

ARTICLE 4: SCOPE OF WORK

4.1 INTENT OF CONTRACT, DUTY OF CONTRACTOR. The intent of the Contract is to provide for the construction, complete in every detail, of the work described at the accepted bid price and within the time established by the contract. The Contractor has the duty to furnish all labor, materials, equipment, tools, transportation, incidentals and supplies and to determine the means, methods and schedules required to complete the work in accordance with the drawings, specifications and terms of the contract.

4.1.1 ENTIRE CONTRACT. This Contract sets forth all of the Contract, conditions, understandings, promises, warranties, and representations between the STATE and the CONTRACTOR relative to this Contract. This Contract supersedes all prior Contracts, conditions, understandings, promises, warranties and representations, which shall have no further force or effect. There are no Contracts, conditions, understandings, promises, warranties, or representations, oral or written, express or implied, between the STATE and the CONTRACTOR other than as set forth or as referred to herein.

4.2 CHANGES. The Project Manager may at any time, during the progress of the work, by written order, and without notice to the sureties, make changes in the work as may be found to be necessary or desirable. Such changes shall not invalidate the Contract nor release the Surety, and the Contractor will perform the work as changed, as though it had been a part of the original Contract.

4.2.1 MINOR CHANGES. Minor changes in the work may be directed by the Project Manager with no change in contract price or time of performance. Minor changes are consistent with the intent of the Contract Documents and do not substantially alter the type of work to be performed or involve any adjustment to the contract sum or extension of the contract time.

4.2.2 ORAL ORDERS

4.2.2.1 Any oral order, direction, instruction, interpretation or determination from the Chairman or any other person which in the opinion of the Contractor causes any change, shall be considered as a change only if the Contractor gives the Chairman written notice of its intent to treat such oral order, direction, instruction, interpretation or determination as a change directive. Such written notice must be delivered to both the Chairman and the Project Manager before the Contractor acts in conformity with the oral order, direction, instruction, interpretation or determination, but not more than five (5) days after delivery of the oral order to the Contractor. The written notice shall state the date, circumstances, whether a time extension will be requested, and source of the order that the Contractor regards as a change. Such written notice may not be waived and shall be a condition precedent to the filing of any claim by the Contractor. Unless the Contractor acts in accordance with this procedure, any such oral order shall not be treated as a change for which the Contractor may make a claim for an increase in the contract time or contract price related to such work.

4.2.2.2 No more than five (5) days after receipt of the written notice from the Contractor, a Field Order shall be issued for the subject work if the Department agrees that it constitutes a change. If no Field Order is issued in the time established, it shall be deemed a rejection of Contractor's claim for a change. If the Contractor objects to the failure to issue a Field Order, it shall file a written protest with the Chairman within thirty (30) days after delivery to the Chairman of the Contractor's written notice of its intention to treat the oral order as a change. In all cases, the Contractor shall proceed with the work. The protest shall be determined as provided in Section 7.25, DISPUTES AND CLAIMS.

4.2.3 FIELD ORDERS. All changes will be set forth in a field order or change order. Upon receipt of a field order, the Contractor shall proceed with the changes as ordered. If the Contractor does not agree

with any of the terms or conditions or in the adjustment or non-adjustment to the contract time and/or contract price set forth therein, it shall file with the Chairman a written protest setting forth its reasons in detail within thirty (30) days after receipt of the field order. In all cases, the Contractor shall proceed with the work as changed. The protest shall be determined as provided in Section 7.25, DISPUTES AND CLAIMS. Failure to file such a protest within the time specified shall constitute agreement on the part of the Contractor with the terms, conditions, amounts and adjustments or non-adjustment to the contract price and/or contract time set forth in the field order.

4.2.4 CHANGE ORDERS

4.2.4.1 The Department will issue sequentially numbered change orders at times it deems appropriate during the contract period. A change order may contain the adjustment in contract price and / or time for a number of Field Orders. No payment for any change will be made until the change order is issued.

4.2.4.2 The penal sum of the Surety Performance and Payment Bonds will be adjusted by the amount of each and every change order.

4.3 DUTY OF CONTRACTOR TO PROVIDE PROPOSAL FOR CHANGES

4.3.1 A Field Order may request the Contractor to supply the Department with a proposal for an adjustment to the contract time or contract price for the work described therein. Any such request for a proposal shall not affect the duty of the Contractor to proceed as ordered with the work described in the Field Order.

4.3.2 The Project Manager from time to time may issue a Bulletin to the Contractor requesting price and / or time adjustment proposals for contemplated changes in the work. A Bulletin is not a directive for the Contractor to perform the work described therein.

4.3.3 Within seven (7) days after receipt of a Bulletin or Field Order containing a request for proposal, the Contractor shall submit to the Project Manager a detailed written statement setting forth all charges the Contractor proposes for the change and the proposed adjustment of the contract time, all properly itemized and supported by sufficient substantiating data to permit evaluation. No time extension will be granted for delays caused by late Contractor pricing of changes or proposed changes. If the project is delayed because Contractor failed to submit the cost proposal within the seven (7) days, or longer as allowed by the Project Manager, liquidated damages will be assessed in accordance with Section 7.26, FAILURE TO COMPLETE THE WORK ON TIME.

4.3.4 No payment shall be allowed to the Contractor for pricing or negotiating proposed or actual changes. No time extension will be granted for delay caused by late Contractor pricing of changes or proposed changes.

4.3.5 The Chairman may accept the entire proposal, or any discreet cost item contained within the proposal or the proposed adjustment to contract time by a notice in writing to the Contractor delivered to the Contractor within thirty (30) days after receipt of the proposal. The written acceptance by the Chairman of all or part of the Contractor's proposal shall create a binding agreement between the parties for that aspect of the change.

4.3.6 If the Department refuses to accept the Contractor's entire proposal, the Chairman may issue a Field Order for the work; or if a Field Order has already been issued, the Department may issue a supplemental Field Order establishing the remaining adjustments to contract price and/or contract time for the ordered changes. If the Contractor disagrees with any term, condition or adjustment

contained in such Field Order or supplemental Field Order, it shall follow the protest procedures set forth in and be subject to the other terms of Subsection 4.2.3, FIELD ORDERS.

4.4 PRICE ADJUSTMENT (§3-125-13 HAR)

4.4.1 Any adjustment in the contract price pursuant to a change or claim in this contract shall be made in one or more of the following ways:

4.4.1.1 By agreement on a fixed price adjustment before commencement of the pertinent performance or as soon thereafter as practicable;

4.4.1.2 By unit prices specified in the contract or subsequently agreed upon;

4.4.1.3 Whenever there is a variation in quantity for any work covered by any line item in the schedule of costs submitted as required by Section 7.2, COMMENCEMENT REQUIREMENTS, by the Department at its discretion, adjusting the lump sum price proportionately;

4.4.1.4 In such other manner as the parties may mutually agree;

4.4.1.5 At the sole option of the Project Manager, by the costs attributable to the event or situation covered by the change, plus appropriate profit or fee, all as specified in Section 4.5, ALLOWANCES FOR OVERHEAD AND PROFIT and the force account provision of Section 8.3, PAYMENT FOR ADDITIONAL WORK; or

4.4.1.6 In the absence of an agreement between the two parties, by a unilateral determination by the Department of the reasonable and necessary costs attributable to the event or situation covered by the change, plus appropriate profit or fee, all as computed in accordance with applicable Sections of Chapters 3-123 and 3-126 of the Hawaii Administrative Rules and Regulations, and Section 4.5, ALLOWANCES FOR OVERHEAD AND PROFIT.

4.5 ALLOWANCES FOR OVERHEAD AND PROFIT (§3-125-13 HAR)

4.5.1 In determining the cost or credit to the Department resulting from a change, the allowances for all overhead, including, extended overhead resulting from adjustments to contract time (including home office, branch office and field overhead, and related delay impact costs) and profit combined, shall not exceed the percentages set forth below:

4.5.1.1 For the Contractor, for any work performed by its own labor forces, twenty percent (20%) of the direct cost;

4.5.1.2 For each subcontractor involved, for any work performed by its own forces, twenty percent (20%) of the direct cost;

4.5.1.3 For the Contractor or any subcontractor, for work performed by their subcontractors, ten percent (10 %) of the amount due the performing subcontractor.

4.5.1.4 Field overhead includes, but is not limited to all costs of supervision, engineering, clerical, layout, temporary facilities, improvements and structures, all general condition expenditures, storage, transport and travel, housing, small tools (as defined in 8.3.4.5(h), pickup trucks and automobiles.

4.5.2 Not more than three markup allowance line item additions not exceeding the maximum percentage shown above will be allowed for profit and overhead, regardless of the number of tier subcontractors.

4.5.3 The allowance percentages will be applied to all credits and to the net increase of direct costs where work is added and deleted by the changes.

4.6 PAYMENT FOR DELETED MATERIAL

4.6.1 CANCELED ORDERS. If acceptable material was ordered by the Contractor for any item deleted by an ordered change in the work prior to the date of notification of such deletion by the Project Manager, the Contractor shall use its best efforts to cancel the order. The Department shall pay reasonable cancellation charges required by the supplier excluding any markup for overhead and profit to the Contractor.

4.6.2 RETURNED MATERIALS - If acceptable deleted material is in the possession of the Contractor or is ultimately received by the Contractor, if such material is returnable to the supplier and the Project Manager so directs, the material shall be returned and the Contractor will be paid for the reasonable charges made by the supplier for the return of the material, excluding any markup for overhead and profit to the Contractor. The cost to the Contractor for handling the returned material will be paid for as provided in Section 4.4, PRICE ADJUSTMENT.

4.6.3 UNCANCELLED MATERIALS. If orders for acceptable deleted material cannot be canceled at a reasonable cost, it will be paid for at the actual cost to the Contractor including an appropriate markup for overhead and profit as set forth in Section 4.5, ALLOWANCES FOR OVERHEAD AND PROFIT. In such case, the material paid for shall become the property of the Department and the cost of further storage and handling shall be paid for as provided in Section 4.4, PRICE ADJUSTMENT.

4.7 VARIATIONS IN ESTIMATED QUANTITIES (§3-125-10 HAR)

4.7.1 Where the quantity of a major unit price item in this contract is estimated on the proposal form and where the actual quantity of such pay item varies more than fifteen percent (15%) above or below the estimated quantity stated in this contract, an adjustment in the contract price shall be made upon demand of either party. The adjustment shall be based upon any increase or decrease in costs due solely to the variation above one hundred fifteen percent (115%) or below eighty-five percent (85%) of the estimated quantity. The adjustment shall be subject to Section 4.4 PRICE ADJUSTMENT and Section 4.5, ALLOWANCES FOR OVERHEAD AND PROFIT. If the quantity variation is such as to cause an increase in the time necessary for completion, the Chairman shall, upon receipt of a written request for an extension of time within thirty (30) days of the item's completion, ascertain the facts and make such adjustment to the completion date as the Chairman finds justified.

4.8 VARIATIONS IN BOTTOM ELEVATIONS. The Contractor shall plan and construct to the bottom elevations of footings, piles, drilled shafts, or cofferdams as shown on the drawings. When the bottom of a footing, pile, drilled shaft, or cofferdam is shown as an estimated or approximate elevation, the Contractor shall plan and construct to that elevation or to any deeper elevation required by the drawings or direction of the Project Manager. In the event the bottom elevation is lowered, the Contractor shall be entitled to additional payment in accordance with Sections 4.4 PRICE ADJUSTMENT and 4.5 ALLOWANCES FOR OVERHEAD AND PROFIT. In the event the bottom elevation is raised, the Department shall be entitled to a credit in accordance with Sections 4.2 CHANGES, 4.4, PRICE ADJUSTMENT and 4.5, ALLOWANCES FOR OVERHEAD AND PROFIT.

4.9 DIFFERING SITE CONDITIONS (§3-125-11 HAR)

4.9.1 During the progress of the work, if the Contractor encounters conditions at the site differing materially from those shown in the drawings and specifications, Contractor shall promptly, and before any such conditions are disturbed or damaged (except in an emergency as required by Subsection 7.17.8. EMERGENCIES), notify the Project Manager in writing of:

4.9.1.1 Subsurface or latent physical conditions at the site differing materially from those indicated in the contract; or

4.9.1.2 Unknown physical conditions at the site, of an unusual nature differing materially from those ordinarily encountered and generally recognized as inherent in work of the character provided for in this contract. Unclaimed motor vehicles or parts thereof and discarded materials or unclaimed items are not unknown or unforeseen physical conditions. (See also Section 5.8, EXAMINATION OF DRAWINGS, SPECIFICATIONS, PROJECT SITE).

4.9.2 After receipt of written notice, the Chairman shall promptly investigate the site, and if it is found that such conditions do materially differ and cause an increase in the Contractor's cost of, or the time required to, perform any part of the work, whether or not changed as a result of such conditions, an adjustment shall be made and the contract modified accordingly. Any adjustment in contract price made pursuant to this Section 4.9. DIFFERING SITE CONDITIONS (§3-125-11 HAR) shall be determined in accordance with Sections 4.4, PRICE ADJUSTMENT and 7.25, DISPUTES AND CLAIMS.

4.9.3 Nothing contained in this Section 4.9, DIFFERING SITE CONDITONS shall be grounds for an adjustment in compensation if the Contractor had actual knowledge or should have known of the existence of such conditions prior to the submission of bids.

4.10 COSTS AND EXPENSES. Any reimbursement due the CONTRACTOR for per diem and transportation expenses under this Contract shall be subject to Chapter 3-123 (Cost Principles) of the Procurement Rules and the following guidelines:

4.10.1 Reimbursement for air transportation shall be actual cost or coach class air fare, whichever is less.

4.10.2 Reimbursement for ground transportation costs shall not exceed the actual cost of renting an intermediate-sized vehicle.

4.10.3 Unless prior written approval of the CHAIRMAN is obtained, reimbursement for subsistence allowance (i.e., hotel and meals, etc.) shall not exceed the applicable daily authorized rates for interisland or out-of-state travel that are set forth in the current Governor's Executive Order authorizing adjustments in salaries and benefits for state officers and employees in the Chairman branch who are excluded from collective bargaining coverage.

~END OF ARTICLE 4~

ARTICLE 5: CONTROL OF WORK

5.1 AUTHORITY OF THE CHAIRMAN - The Chairman shall make final and conclusive decisions on all questions which may arise relating to the quality and acceptability of the materials furnished and work performed, the manner of performance and the rate of progress of the work, the interpretation of the plans and specifications, the acceptable fulfillment of the contract on the part of the Contractor, the compensation under the contract and the mutual rights of the parties to the contract. The Chairman shall have the authority to enforce and make effective such decisions and orders at the Contractor's expense when the Contractor fails to carry such decisions and orders out promptly and diligently. The Chairman shall have the authority to suspend the work wholly or in part as provided in Section 7.24, SUSPENSION OF WORK.

5.2 AUTHORITY OF THE PROJECT MANAGER. The Project Manager has the authority to act on behalf of the Department on all matters regarding the contract and the work that are not reserved for the Chairman. The Project Manager's authority is vested exclusively in the Project Manager except when specific authority to act for the Project Manager has been delegated to a specific person or persons. Such delegation of authority may be established by the Contract Documents; otherwise, it is not effective or binding upon the Department until such written notification of the delegation is received by the Contractor. The Administrator of the Land Development Division of the Department, or his designee, shall also have authority to act on behalf of the Department on all matters regarding the contract that are not reserved for the Chairman.

5.3 AUTHORITY OF THE INSPECTOR

5.3.1 The Inspector shall observe and inspect the contract performance and materials. The Inspector does not have any authority vested in the Project Manager unless specifically delegated in writing.

5.3.2 The Inspector may offer advice and recommendations to the Contractor, but any such advice or recommendations are not directives from the Project Manager.

5.3.3 The Inspector has no authority to allow deviations from the Contract Documents and may reject any and all work that the Inspector deems is not in conformity with the contract requirements. Failure of an Inspector at any time to reject non-conforming work shall not be considered a waiver of the Department's right to require work in strict conformity with the Contract Documents as a condition of final acceptance.

5.4 AUTHORITY OF CONSULTANT(S). The Department may engage Consultant(s) for limited or full observation to supplement the inspections performed by the Department and respective Counties. Unless otherwise specified in writing to the Contractor, such retained Consultant(s) will have the authority of an Inspector.

5.5 SHOP DRAWINGS AND OTHER SUBMITTALS. The following documents shall be submitted where required by the Contract Documents:

5.5.1 SHOP DRAWING

(a) The Contractor shall prepare, thoroughly check, and approve all shop drawings, including those prepared by subcontractors or any other persons. The Contractor shall indicate its approval by stamping and signing each drawing. Any shop drawing submitted without being reviewed, stamped and signed will be considered as not having been submitted, and any delay caused thereby shall be the Contractor's responsibility.

(b) Shop drawings shall indicate in detail all parts of an item of work, including erection and setting instructions and engagements with work of other trades or other separate contractors. Shop drawings for structural steel, millwork and pre-cast concrete shall consist of calculations, fabrication details, erection drawings and other working drawings to show the details, dimensions, sizes of members, anchor bolt plans, insert locations and other information for the complete fabrication and erection of the structure to be constructed.

(c) The Contractor shall be responsible for the design of all structural curtain walls, all connections and fasteners for structural steel and architectural and structural precast concrete. Curtain walls, connections and fasteners shall be designed by a licensed professional engineer to carry the indicated or necessary loads. The precast concrete pieces shall be designed to withstand erection, transportation and final loading stresses. All calculations shall be performed by a licensed professional engineer and submitted to the Project Manager for review.

(d) The cost of shop drawings or any other submittal shall not be a separate or individual pay item. All costs of furnishing shop drawings required by the contract shall be included in the price agreed to be paid for the various contract items of work, and no additional allowances will be made therefor.

(e) All shop drawings as required by the contract, or as determined by the Project Manager to be necessary to illustrate details of the work shall be submitted to the Project Manager with such promptness as to cause no delay in the work or in that of any other Contractor. Delay caused by the failure of the Contractor to submit shop drawings on a timely basis to allow for review, possible resubmittal and acceptance will not be considered as a justifiable reason for a contract time extension. Contractor, at its own risk, may proceed with the work affected by the shop drawings before receiving acceptance; however the Department shall not be liable for any costs or time required for the correction of work done without the benefit of accepted shop drawings.

(f) It is the Contractor's obligation and responsibility to check all of its and its subcontractor's shop drawings and be fully responsible for them and for coordination with connecting and other related work. The Contractor shall prepare, and submit to the Project Manager coordination drawings showing the installation locations of all plumbing, piping, duct and electrical work including equipment throughout the project. By approving and submitting shop drawings, the Contractor thereby represents that it has determined and verified all field measurements and field construction criteria, or will do so, and that it has checked and coordinated each shop drawing with the requirements of the work and the contract documents. When shop drawings are prepared and processed before field measurements and field construction criteria can be or have been determined or verified, the Contractor shall make all necessary adjustments in the work or resubmit further shop drawings, all at no change in contract price or time.

5.5.1.1 SHOP DRAWING FORM. Each drawing and/or series of drawings submitted must be accompanied by a letter of transmittal giving a list of the titles and number of the drawings. Each series shall be numbered consecutively for ready reference and each drawing shall be marked with the following information:

(a) Date of Submission
(b) Name of Project
(c) Project Number
(d) Location of Project
(e) Name of submitting Contractor and Subcontractor
(f) Revision Number
(g) Specification and/or any drawing reference by article or sheet number.

5.5.1.2 No shop drawing shall be smaller than 24" x 36" nor larger than 28" x 42". At the determination of the Project Manager, each sheet of drawings for the submittal shall consist of either (1) reproducible transparency and three ozalid prints; or (2) six ozalid prints.

5.5.1.3 The Department will not be responsible for any cost of modifying/adjusting precast structures to fit the final as-built design, actual field conditions and finished work. To this end, the Contractor shall follow the following procedures:

(a) Submit shop drawings for general design conformity for approval. Delay precasting operations.

(b) Start infrastructure work. Expose, check grade and install improvements requiring precast structures. Resubmit shop drawings with schedule for all structures indicating required deviations, correct and final inverts, depths, openings, special reinforcing and details, alignments, correct configurations, tops, grating, etc. The Contractor shall submit a schedule for the precasting work. Precast operations may commence based on approved shop drawings. During precast operations, the Project Manager may inspect the operations at least once per differing group of structures. The Contractor shall assume all risks and costs associated with modifying/adjusting the precast structures due to incomplete field verification, premature analysis and shop drawings.

5.5.2 DESCRIPTIVE SHEETS AND OTHER SUBMITTALS. When a submittal is required by the contract, the Contractor shall submit to the Project Manager eight (8) complete sets of descriptive sheets such as brochures, catalogs, illustrations, etc., which will completely describe the material, product, equipment, furniture or appliances to be used in the project as shown in the drawings and specifications. Prior to the submittal, the Contractor will review and check all descriptive sheets for conformity to the contract requirements and indicate such conformity by marking or stamping and signing each sheet. It is the responsibility of the Contractor to submit descriptive sheets for review and acceptance by the Project Manager as required at the earliest possible date after the date of award in order to meet the construction schedule. Delays caused by the failure of the Contractor to submit descriptive sheets as required will not be considered as justifiable reasons for contract time extension. The submittal shall list the seven (7) items of information as listed in Subsection 5.5.1, Shop Drawing.

5.5.3 MATERIAL SAMPLES AND COLOR SAMPLES. Prior to their submittal, all color samples and material shall be assembled and presented as required by the Department. When sample submittals are required by the contract, the Contractor shall review, approve, indicate its approval and submit to the Project Manager samples of the materials to be used in the project and color selection samples. It is the responsibility of the Contractor to submit material and color samples for review as required at the earliest possible date after the date of award in order to meet the construction schedule. Delays caused by the failure of the Contractor to submit material and color samples will not be considered as justifiable reasons for contract time extension. The submittal shall list the seven (7) items of information as listed in Subsection 5.5.1, Shop Drawing.

5.5.4 SUBMITTAL VARIANCES. The Contractor shall include with the submittal, written notification clearly identifying all deviations or variances from the contract drawings, specifications and other Contract Documents. The notice shall be in a written form separate from the submittal. The variances shall also be clearly indicated on the shop drawing, descriptive sheet, material sample or color sample. Failure to so notify of and identify such variances shall be grounds for the subsequent rejection of the related work or materials, notwithstanding that the submittal was accepted by the Project Manager. If the variances are not acceptable to the Project Manager, the Contractor will be

required to furnish the item as specified or indicated on the Contract Documents at no additional cost or time.

5.5.5 REVIEW AND ACCEPTANCE PROCESS. The Project Manager shall check shop drawings and within forty-five (45) days of receipt return them to the Contractor unless otherwise agreed between the Contractor and the Department. Submittals required for work to be installed within the first sixty days after the notice to proceed shall be returned by the Project Manager within twenty (20) days. If the volume of shop drawings submitted at any time for review is unusually large, the Contractor may inform the Project Manager of its preferred order for review and the Project Manager shall use reasonable efforts to accommodate the Contractor's priorities.

5.5.5.1 The acceptance by the Project Manager of the Contractor's submittal relates only to their sufficiency and compliance with the intention of the contract. Acceptance by the Project Manager of the Contractor's submittal does not relieve the Contractor of any responsibility for accuracy of dimensions, details, and proper fit, and for agreement and conformity of submittal with the Contract Drawings and Specifications. Nor will the Project Manager's acceptance relieve the Contractor of responsibility for variance from the Contract Documents unless the Contractor, at the time of submittal, has provided notice and identification of such variances required by this section. Acceptance of a variance shall not justify a contract price or time adjustment unless the Contractor requests such an adjustment at the time of submittal and the adjustment are explicitly agreed to in writing by the Department. Any such request shall include price details and proposed scheduling modifications. Acceptance of a variance is subject to all contract terms, stipulations and covenants, and is without prejudice to any and all rights under the surety bond.

5.5.5.2 If the Project Manager returns a submittal to the Contractor that has been rejected, the Contractor, so as not to delay the work, shall promptly make a resubmittal conforming to the requirements of the Contract Documents and indicating in writing on the transmittal and the subject submittal what portions of the resubmittal has been altered in order to meet the acceptance of the Project Manager. Any other differences between the resubmittal and the prior submittal shall also be specifically described in the transmittal.

5.5.5.3 No mark or notation made by the Project Manager or Consultant(s) on or accompanying the return of any submittal to the Contractor shall be considered a request or order for a change in work. If the Contractor believes any such mark or notation constitutes a request for a change in the work for which it is entitled to an adjustment in contract price and/or time, the Contractor must follow the same procedures established in Section 4.2, CHANGES for oral orders, directions, instructions, interpretations or determinations from the Project Manager or else lose its right to claim for an adjustment.

5.6 COORDINATION OF CONTRACT DOCUMENTS. It is the intent of the Contract Documents to describe a functionally complete Project (or part thereof) to be constructed in accordance with the Contract Documents. The Contract Documents are complementary: any requirement occurring in one document is as binding as though occurring in all. In the event of conflict or discrepancy the priorities stated in the following Subsections shall govern:

5.6.1 Addenda shall govern over all other Contract Documents. Subsequent addenda issued shall govern over prior addenda only to the extent specified.

5.6.2 Special Conditions and Proposal shall govern over the General Conditions and Specifications.

5.6.3 Specifications shall govern over drawings.

5.6.4 Specification Error - Should an error or conflict appear within the specification, the Contractor shall immediately notify the Project Manager. The Project Manager shall promptly issue instructions as to procedure. Any requirement occurring in one or more parts of the specification is as binding as though occurring in all applicable parts.

5.6.4.1 Should an error or conflict appear within a specification section, between a listed manufacturer / product and the performance requirements of the specification section, the performance requirements shall govern.

5.6.4.2: In the event of a conflict between AG-008 103D General Conditions (the "General Conditions") and these DHHL Construction General Conditions, the requirements of these DHHL Construction General Conditions will apply to the extent provided by and as allowed under law.

5.6.5 DRAWINGS

5.6.5.1 Schedules shall govern over all other notes and drawings.

5.6.5.2 Bottom elevations of footings shown on drawings shall govern over a general note such as: "All footings shall rest on firm, undisturbed soil and extend a minimum of a certain number of feet into natural or finish grade, whichever is lower." In the event the footing must be lowered below the bottom elevation shown, the Contractor shall be entitled to additional payment as provided in Section 4.2, CHANGES. In the event the footing is raised above the bottom elevation shown, the Department shall be entitled to a credit as provided in Section 4.2, CHANGES.

5.6.5.3 When a bottom of pile, drilled shaft, piling or cofferdam is shown as an estimated or approximate elevation, the Contractor shall plan and construct to that elevation or to any deeper elevation required by the plans or the direction by the Project Manager. The Project Manager, at the Project Manager's sole discretion, may order in writing termination of all or part of the work above the estimated or approximate elevation.

5.6.5.4 Except for drawing schedules and bottom elevations as noted above, general notes shall govern over all other portions of the drawings:

5.6.5.5 Larger scale drawings shall govern over smaller scale drawings.

5.6.5.6 Figured or numerical dimensions shall govern over dimensions obtained by scaling. Measurements from the drawings when scaled shall be subject to the approval of the Project Manager.

5.6.5.7 In cases of discrepancies in the figures or drawings, the discrepancies shall be immediately referred to the Project Manager without whose decision said discrepancy shall not be corrected by the Contractor save at its own risk and in the settlement of any complications arising from such adjustment without the knowledge and consent of the Project Manager, the Contractor shall bear all extra expense involved.

5.6.5.8 Items shown on the drawings that are completely void in terms of description, details, quality and / or performance standards in both the Drawings and Specifications to make a price determination shall be considered an omission and the Contractor shall immediately refer same to the Project Manager for a decision.

5.6.5.9 Where there is a conflict between the architectural sheets and the civil or landscaping or electrical sheets, etc., the conflict shall be considered a discrepancy and the Contractor shall immediately refer same to the Project Manager for a decision.

5.6.5.10 Any requirement occurring in one or more of the sheets is as binding as though occurring in all applicable sheets.

5.7 INTERPRETATION OF DRAWINGS AND SPECIFICATIONS. The Contractor shall carefully study and compare the Contract Documents with each other, with field conditions and with the information furnished by the Department and shall at once report to the Project Manager errors, conflicts, ambiguities, inconsistencies or omissions discovered. Should an item not be sufficiently detailed or explained in the Contract Documents, Contractor shall report and request the Project Manager's clarification and interpretation. The Project Manager will issue a final clarification or final interpretation.

5.8 EXAMINATION OF DRAWINGS, SPECIFICATIONS, PROJECT SITE

5.8.1 The Contractor shall examine carefully the Project Site to become familiar with the conditions to be encountered in performing the work and the requirements of the Contact Documents.

5.8.1.1 No extra compensation will be given by reason of the Contractor's misunderstanding or lack of knowledge of the requirements of the work to be accomplished or the conditions to be encountered in performing the project.

5.8.1.2 No extra compensation will be given by reason of the Contractor's misunderstanding or lack of knowledge when the existence of differing site, subsurface or physical conditions could have been reasonably discovered or revealed as a result of any examination, investigation, exploration, test or study of the site and contiguous areas required by the bidding requirements or contract documents to be conducted by or for the Contractor.

5.8.2 When the contract drawings include a log of test borings showing a record of the data obtained by the Department's investigation of subsurface conditions, said log represents only the opinion of the Department as to the character of material encountered in its test borings and at only the location of each boring. The Contractor acknowledges that underground site conditions in Hawaii vary widely. There is no warranty, either expressed or implied, that the conditions indicated are representative of those existing throughout the work or any part of it, or that other conditions may not occur.

5.8.3 Reference is made to the Special Conditions for identification of subsurface investigations, reports, explorations and tests utilized by the Department in preparation the Contract Documents. Such reports, drawings, boring logs etc., if any, are not part of the Contract Documents.

5.9 COOPERATION BETWEEN THE CONTRACTOR AND THE DEPARTMENT

5.9.1 FURNISHING DRAWINGS AND SPECIFICATIONS. Contractor will be supplied copies of the Contract Drawings and Specifications as specified in the Special Conditions. Contractor shall have and maintain at least one unmarked copy of the Contract Drawings and Specifications on the work site, at all times. Contractor shall cooperate with the Project Manager, the Inspector(s), and other contractors in every possible way.

5.9.2 SUPERINTENDENT. The Contractor shall have a competent superintendent on the work site as its designated agent. The superintendent shall be able to read and understand the project plans and

specifications and shall be experienced in the type of project being undertaken and the work being performed. The superintendent shall receive instructions from the Project Manager or its authorized representative. The Contractor shall authorize the superintendent to (a) execute the orders and directions of the Project Manager or its authorized representative without delay and (b) promptly supply such materials, equipment, tools, labor and incidentals as may be required to complete the project within the prescribed contract time. The Contractor shall furnish a superintendent regardless of the amount of project work sublet.

5.9.2.1 If the superintendent or agent is not present at the work site, the Project Manager shall have the right to suspend the work as described under Section 7.24, SUSPENSION OF WORK.

5.9.2.2 The Contractor shall file with the Project Manager a written statement giving the name of the superintendent or agent assigned to the project. The Contractor shall be responsible for notifying the Project Manager in writing of any change in the superintendent or agent.

5.9.2.3 The requirements of this Subsection 5.9.2, SUPERINTENDENT may be waived by the Project Manager.

5.9.3 ENGINEERING WORK. The Contractor shall properly and accurately lay out the work, perform all engineering work, and furnish all engineering materials and equipment required to establish and maintain all lines, grades, dimensions and elevations called for in the drawings or required in the progress of construction, unless otherwise noted in the contract documents. The Contractor will be held definitely and absolutely responsible for any errors in lines, grades, dimensions and elevations and shall at once, on instruction from the Project Manager, correct and make good such errors or any errors, or faults in the work resulting from errors in engineering performed under the requirements of its contract to the entire satisfaction of the Project Manager. Full compensation for the work shall be included in the prices paid for contract items of work. No additional allowance will be made for the correction of incorrect engineering work.

5.9.3.1 The Project Manager shall furnish the requisite bench elevations.

5.9.3.2 The Contractor shall locate and verify all lines, grades, dimensions and elevations indicated on the drawings before any excavation, or construction begins. Any discrepancy shall be immediately brought to the attention of the Project Manager; any change shall be made in accordance with the Project Manager's instruction.

5.9.3.3 The Contractor shall verify all street survey monuments (horizontal and vertical alignment) prior to final acceptance by the Project Manager in accordance with any governmental requirements.

5.9.3.4 The Contractor shall provide a surveyor or Civil Engineer licensed in the State of Hawaii to verify and establish all lines, grades, dimensions and elevations.

5.9.4 USE OF STRUCTURE OR IMPROVEMENT. The Department shall have the right, at any time during construction of the structure or improvements, to enter same for the purpose of installing by government labor or by any other Contractor or utility any necessary work in connection with the installation of facilities, it being mutually understood and agreed, however, that the Contractors, utilities and the Department will, so far as possible work to the mutual advantage of all, where their several works in the above mentioned or in unforeseen instances touch upon or interfere with each other. As a convenience to those involved, the Project Manager shall allocate the work and designate the sequence of construction in case of controversy between Contractors on separate projects under Department jurisdiction.

5.9.4.1 The Department shall also have the right to use the structure, equipment, improvement or any part thereof, at any time after it is considered by the Project Manager as available. In the event that the structure, equipment or any part thereof is so used, the Department shall be responsible for all expenses incidental to such use and any damages resulting from the Department's use.

5.9.4.2 Equipment warranty will commence to run before the work is complete when and if the Department begins actual use of the equipment for the purpose for which the equipment was designed and installed.

5.9.4.3 If the Department enters the structure for construction and/or occupancy and the Contractor is delayed because of interference by the Department or by extra work resulting from damage which the Contractor is not responsible for, or by extraordinary measures the Contractor must take to accommodate the Department, the Contractor shall be granted an extension of time in accordance with Section 7.21, CONTRACT TIME. However, if such use increases the cost or delays the completion of the remaining portions of work, the Contractor shall be entitled to such extra compensation or extension of time or both, as the Department may determine to be proper. Any additional work necessary will be paid in accordance with Section 8.3, PAYMENT FOR ADDITIONAL WORK.

5.10 INSPECTION. The Project Manager, the Department's consultants, inspectors employed by the Department and other representatives duly authorized by the Department shall at all times have access to the work during its construction and shall be furnished with every reasonable facility for ascertaining at any time that the materials and the workmanship are in accordance with the requirements and intentions of the contract. All work done and all materials furnished shall be subject to inspection and acceptance.

5.10.1 Such inspection and approval may extend to all or part of the work, and to the preparation, fabrication or manufacture of the materials to be used. By entering into a contract for the supply of materials, equipment or performance of labor in connection with the work, such material and equipment supplier or labor contractor consents to and is subject to the terms of Section 5.9, COOPERATION BETWEEN THE CONTRACTOR AND THE DEPARTMENT to the same extent as the Contractor.

5.10.2 AUTHORITY TO SUSPEND OPERATIONS. The Project Manager shall have the authority to suspend operations of any work being improperly performed by issuing a written order giving the reason for shutting down the work. Should the Contractor disregard such written order, the work done thereafter will not be accepted nor paid for.

5.10.3 The inspection of the work shall not relieve the Contractor of any of its obligations to fulfill the contract as prescribed. Notwithstanding prior payment and acceptance by the Project Manager, any defective and nonconforming work shall be corrected to comply with the contract requirements. Unsuitable, unspecified or unapproved materials may be rejected.

5.10.4 FEDERAL AGENCY INSPECTION. Projects financed in whole or in part with Federal funds shall be subject to inspection and corrective requirements at all times by the Federal Agency involved at no cost to the Department.

5.11 REMOVAL OF DEFECTIVE, NON-CONFORMING AND UNAUTHORIZED WORK

5.11.1 All work which has been rejected as not conforming to the requirements of the Contract shall be remedied or removed and replaced by the Contractor in an acceptable manner and no compensation

will be allowed for such removal or replacement. Any work done beyond the work limits shown on the drawings and specifications or established by the Project Manager or any additional work done without written authority will be considered as unauthorized and will not be paid for. work so done may be ordered removed at the Contractor's expense.

5.11.2 SCHEDULING CORRECTIVE WORK. The Contractor shall perform its corrective or remedial work at the convenience of the Department and shall obtain the Project Manager's approval of its schedule.

5.11.3 FAILURE TO CORRECT WORK. Upon failure on the part of the Contractor to comply promptly with any order of the Project Manager made under the provisions of Section 5.10, the Project Manager shall have authority to cause defective work to be remedied or removed and replaced, and unauthorized work to be removed, at the Contractor's expense, and to deduct the costs from any monies due or to become due the Contractor.

5.12 VALUE ENGINEERING INCENTIVE (§3-132 HAR amended by Act 149 SLH 1999). On projects with contract amounts in excess of $250,000 (two hundred fifty thousand dollars), the following Value Engineering Incentive Clause shall apply to allow the Contractor to share in cost savings that ensue from cost reduction proposals it submits.

5.12.1 The Value Engineering Incentive Clause applies to all Value Engineering Change Proposals (cost reduction proposals, hereinafter referred to as (VECP) initiated and developed by the Contractor for changing the drawings, designs, specifications or other requirements of this contract. This clause does not however, apply to any VECP unless it is identified as such by the Contractor at the time of its submission to the Project Manager.

5.12.2 VALUE ENGINEERING CHANGE PROPOSAL (VECP). All VECP must:

5.12.2.1 Result in a savings to the Department of at least $4000 (four thousand dollars) by providing less costly items and without impairing any essential functions and characteristics such as service life, reliability, economy of operation, ease of maintenance and all necessary features of the completed work;

5.12.2.2 Require, in order to be applied to this Contract, a change order to this Contract; and

5.12.2.3 Not adversely impact on the schedule of performance or the Contract completion date.

5.12.3 VECP REQUIRED INFORMATION. The VECP will be processed expeditiously and in the same manner as prescribed for any other change order proposal. As a minimum, the following information will be submitted by the Contractor with each proposal:

5.12.3.1 A description of the difference between the existing contract requirements and the VECP, and the comparative advantages and disadvantages of each including durability, service life, reliability, economy of operation, ease of maintenance, design safety standards, desired appearance, impacts due to construction and other essential or desirable functions and characteristics as appropriate;

5.12.3.2 An itemization of the requirements of the contract which must be changed if the VECP is adopted and a recommendation as to how to make each such change;

5.12.3.3 An estimate of the reduction in performance costs that will result from adoption of the VECP taking into account the costs of implementation by the Contractor, including any amounts attributable to subcontracts, and the basis for the estimate;

5.12.3.4 A prediction of any effects the VECP would have on other costs to the Department, such as Department furnished property costs, costs of related items, and costs of maintenance and operation over the anticipated life of the material, equipment, or facilities as appropriate; the construction schedule, sequence and time; and bid item totals used for evaluation and payment purposes;

5.12.3.5 A statement of the time by which a change order adopting the VECP must be issued so as to obtain the maximum cost reduction during the remainder of this contract noting any effect on the contract time; and 5.12.3.6 The dates of any previous submissions of the VECP, the numbers of any Government contracts under which submitted and the previous actions by the Government, if known.

5.12.4 REQUIRED USE OF LICENSED ARCHITECT OR ENGINEER. When, in the judgment of the Project Manager, a VECP alters the design prepared by a registered professional architect or engineer, the Contractor shall ensure the changes to be prepared are by or under the supervision of a licensed professional architect or engineer, and stamped and so certified.

5.12.5 Unless and until a change order applies a VECP to a contract, the Contractor shall remain obligated to perform in accordance with the terms of the contract and the Department shall not be liable for delays incurred by the Contractor resulting from the time required for the Department's determination of the acceptability of the VECP.

5.12.5.1 The determination of the Project Manager as to the acceptance of any VECP under a contract shall be final.

5.12.6 ACCEPTANCE OF VECP. The Project Manager may accept in whole or in part any VECP submitted pursuant to this section by issuing a change order to the Contract. Prior to issuance of the change order, the Contractor shall submit complete final contract documents similar to those of the original Contract showing the accepted changes and the new design and features as well as the following:

5.12.6.1 Design calculations;

5.12.6.2 The design criteria used; and

5.12.6.3 A detailed breakdown of costs and expenses to construct or implement such revisions.

5.12.6.4 The change order will identify the final VECP on which it is based.

5.12.7 VECP PRICE ADJUSTMENTS. When a VECP is accepted under a contract, an adjustment in the contract price shall be made in accordance with Section 4.4, PRICE ADJUSTMENT. The adjustment shall first be established by determining the effect on the Contractor's cost of implementing the change, including any amount attributable to subcontractors and to the Department's charges to the Contractor for architectural, engineering, or other consultant services, and the staff time required to examine and review the proposal. The contract price shall then be reduced by fifty percent (50%) of the net estimated decrease in the cost of performance.

5.12.8 The Contractor may restrict the Department's right to use the data or information or both, on any sheet of a VECP or of the supporting data, submitted pursuant to this Subsection, if it is stated on that sheet as follows:

5.12.8.1 "This data or information or both shall not be disclosed outside the Department or be duplicated, used, or disclosed, in whole or in part, for any purpose other than to evaluate this VECP. This restriction shall not limit the Department's right to use this data or information or both if obtained from another source, or is otherwise available, without limitations. If this VECP is accepted by the Department by issuance of a change order after the use of this data or information or both in such an evaluation, the Department shall have the right to duplicate, use and disclose any data or information or both pertinent to the proposal as accepted in any manner and for any purpose whatsoever and have others so do."

5.12.9 In the event of acceptance of a VECP, the Department shall have all rights to use, duplicate or disclose in whole or in part in any manner and for any purpose whatsoever, and to have or permit others to do so, any data or information or both reasonably necessary to fully utilize such proposal.

5.12.10 The Contractor shall submit with each VECP all required information and provide all additional information as may be required by the Project Manager to evaluate and implement the VECP. The cost for preparing the VECP shall be the Contractor's responsibility, and any part of the Contractor's cost for implementing the change shall be due only when the proposal is accepted and a change order is issued.

5.12.11 If the service of the Department's architect, Project Manager or consultant is necessary to review and evaluate a VECP, the cost therefor shall be paid for by the Contractor.

5.12.12 Each VECP shall be evaluated as applicable to this contract, and past acceptance on another Department project for a similar item shall not be automatic grounds for approval.

5.12.13 The method by which the Contractor will share a portion of the cost savings from an accepted VECP shall be for this contract only, and no consideration shall be made for future acquisition, royalty type payment or collateral savings.

5.12.13.1 The Department may accept the proposed VECP in whole or in part. The Chairman shall issue a contract change order to identify and describe the accepted VECP.

5.13 SUBCONTRACTS. Nothing contained in the contract documents shall create a contractual relationship between the Department and any subcontractor.

5.13.1 SUBSTITUTING SUBCONTRACTORS. Contractors may enter into subcontracts only with subcontractors listed in the proposal. No subcontractor may be added or deleted and substitutions will be allowed only if the subcontractor:

5.13.1.1 Fails, refuses or is unable to enter into a subcontract; or

5.13.1.2 Becomes insolvent; or

5.13.1.3 Has its subcontractor's license suspended or revoked; or

5.13.1.4 Has defaulted or has otherwise breached the subcontract in connection with the subcontracted work; or

5.13.1.5 Is unable to comply with other requirements of law applicable to contractors, subcontractors and public works projects.

5.13.2 Requesting Approval to Substitute a Subcontractor. Requests to substitute a subcontractor shall be submitted to the Project Manager for approval. Contractor agrees to hold the Department harmless and indemnify the Department for all claims, liabilities, or damages whatsoever, including attorney's fees arising out of or related to the approval or disapproval of the substitution.

5.13.3 The Contractor shall cause appropriate provisions to be inserted in all subcontracts relative to the work to bind subcontractors to the Contractor by the terms of the General Conditions and the other contract documents insofar as applicable to the work of the subcontractor and to give the Contractor the same rights regarding the termination of a subcontractor as the Department may exercise over the Contractor.

5.13.4 The Contractor shall not sponsor any unliquidated subcontractor's claim against the Department and shall defend, indemnify and hold the Department harmless against any direct claims by its subcontractors. Any claim for additional compensation by a subcontractor in connection with the work shall be made only against the Contractor. The Contractor may not assert any such claim against the Department until the liability of the Contractor has been unconditionally established by negotiation, arbitration or litigation, and the amount due the subcontractor has been determined, save for interest due.

5.13.5 Once a subcontractor's claim is established, should the Contractor intend to make the claim against the Department, it shall follow the procedure set forth under Section 7.25, DISPUTES AND CLAIMS.

5.13.6 SUBCONTRACTING. Contractor shall perform with its own organization, work amounting to not less than twenty percent (20%) of the total contract cost, exclusive of costs for materials and equipment the Contractor purchases for installation by its subcontractors, except that any items designated by the Department in the contract as "specialty items" may be performed by a subcontractor and the cost of any such specialty items so performed by the subcontractor may be deducted from the total contract cost before computing the amount of work required to be performed by the Contractor with its own organization. For the purposes of this section, the Contractor's work is defined as: direct cost labor for contractor's forces; direct cost materials installed by the contractor's direct cost labor force; direct cost equipment, either owned or leased, used by the contractor's direct cost labor force; and field overhead cost to include: field supervision, field office trailer (if any), field office equipment and supplies, etc.

~END OF ARTICLE 5~

ARTICLE 6: CONTROL OF MATERIALS AND EQUIPMENT

6.1 MATERIALS AND EQUIPMENT. Contractor shall furnish, pay for and install all material and equipment as called for in the drawings and specifications. Materials and equipment shall be new and the most suitable for the purpose intended unless otherwise specified. The Department does not guarantee that the specified or pre-qualified product listed in the drawings and specifications are available at the time of bid or during the contract period.

6.2 SOURCE OF SUPPLY AND QUALITY OF MATERIALS

6.2.1 Only materials conforming to the drawings and specifications and, when required by the contract have been accepted by the Project Manager, shall be used. In order to expedite the inspection and testing of materials, at the request of the Project Manager, the Contractor shall identify its proposed sources of materials within ten (10) days after notification by the Project Manager.

6.2.2 At the option of the Project Manager, the materials may be accepted by the Project Manager at the source of supply before delivery is started. Representative preliminary samples of the character and quantity prescribed shall be submitted by the Contractor or producer for examination and tested in accordance with the methods referred to under samples and tests.

6.2.3 PROJECT MANAGER'S AUTHORIZATION TO TEST MATERIALS. Materials proposed to be used may be inspected and tested whenever the Project Manager deems necessary to determine conformance to the specified requirements. The cost of testing shall be borne by the Contractor. However, should test results show that the material(s) is in compliance with the specified requirements; the cost of the testing will be borne by the Department.

6.2.4 UNACCEPTABLE MATERIALS. In the event material(s) are found to be unacceptable, the Contractor shall cease their use, remove the unacceptable material(s) that have already been installed or applied, and furnish acceptable materials all at no additional cost to the Department. No material which is in any way unfit for use shall be used.

6.3 SUBSTITUTION OF MATERIALS AND EQUIPMENT

6.3.1 SUBSTITUTION OF MATERIALS AND EQUIPMENT BEFORE BID OPENING For materials and equipment submitted in compliance with Instructions to Bidders, if after installing the substituted product, an unlisted variance is discovered the Contractor shall immediately replace the product with a specified product at no cost to the Department.

6.3.2 SUBSTITUTION AFTER CONTRACT AWARD. Subject to the Project Manager's determination if the material or equipment is equal to the one specified or prequalified, substitution of material or equipment may be allowed after the Letter of Award is issued only:

6.3.2.1 If the specified or prequalified item is delayed by unforeseeable contingencies beyond the control of the Contractor which would cause a delay in the project completion; or

6.3.2.2 If any specified or prequalified item is found to be unusable or unavailable due to a change by the manufacturer or other circumstances; or

6.3.2.3 If the Contractor desires to provide a more recently developed material, equipment, or manufactured model from the same named manufacturer than the one specified or prequalified; or

6.3.2.4 If the specified material and / or equipment inadvertently lists only a single manufacturer.

6.3.3 A substitution request after the Contract is awarded shall be fully explained in writing. Contractor shall provide brochures showing that the substitute material and / or equipment is equal or better in essential features and also provide a matrix showing comparison of the essential features. Contractor shall justify its request and include quantities and unit prices involved, respective supplier's price quotations and such other documents necessary to fully support the request. Any savings in cost will be credited to the Department. Contractor shall absorb any additional cost for the substitute item(s) or for its installation. Submitting a substitution request, does not imply that substitutions, for brand name specified materials and equipment will be allowed. The Project Manager may reject and deny any request deemed irregular or not in the best interest of the Department. A request for substitution shall not in any way be grounds for an extension of contract time. At the discretion of the Project Manager, a time extension may be granted for an approved substitution.

6.4 ASBESTOS CONTAINING MATERIALS. The use of materials or equipment containing asbestos is prohibited under this contract. Contractor warrants that all materials and equipment incorporated in the project are asbestos-free.

6.5 TEST SAMPLES

6.5.1 The Project Manager may require any or all materials to be tested by means of samples or otherwise. Contractor shall collect and forward samples requested by the Project Manager. Contractor shall not use or incorporate any material represented by the samples until all required tests have been made and the material has been accepted. In all cases, the Contractor shall furnish the required samples without charge. Where samples are required from the completed work, the Contractor shall cut and furnish samples from the completed work. Samples so removed shall be replaced with identical material and refinished. No additional compensation will be allowed for furnishing test samples and their replacement with new materials.

6.5.2 Tests of the material samples will be made in accordance with the latest standards of the American Society for Testing and Materials (ASTM), as amended prior to the contract date unless otherwise provided. In cases where a particular test method is necessary or specifications and serial numbers are stipulated, the test shall be made by the method stated in the above-mentioned publication. Where the test reference is the American Association of State Highway and Transportation Officials (AASHTO), it means the specifications and serial numbers of the latest edition and amendments prior to the bid date.

6.5.3 The Project Manager may, at no extra cost to the Department retest any materials which have been tested and accepted at the source of supply after the same has been delivered to the work site. The Project Manager shall reject all materials which, when retested, do not meet the requirements of the Contract.

6.6 MATERIAL SAMPLES

6.6.1 The Contractor shall furnish all samples required by the drawings and specifications or that may be requested by the Project Manager of any and all materials or equipment it proposes to use. Unless specifically required, samples are not to be submitted with the bid.

6.6.2 No materials or equipment of which samples are required shall be used on the work until the Project Manager has received and accepted the samples. If the Contractor proceeds to use such materials before the Project Manager accepts the samples, the Contractor shall bear the risk.

6.6.3 Contractor shall furnish two (2) copies of a transmittal letter with each shipment of samples. The letter shall provide a list of the samples, the name of the building or work for which the materials are intended and the brands of the materials and names of the manufacturers. Also, each sample submitted shall have a label indicating the material represented, its place of origin, the names of the producer, the Contractor and the building or work for which the material is intended. Samples of finished materials shall be marked to indicate where the materials represented are required by the drawings or specifications.

6.6.4 Acceptance of any sample(s) shall be only for the characteristics or for the uses named in such acceptance and for no other purpose. Acceptance of samples shall not change or modify any contract requirement. All samples will be provided by the Contractor at no extra cost to the Department. See also Section 5.5, SHOP DRAWINGS AND OTHER SUBMITTALS.

6.7 NON-CONFORMING MATERIALS. All materials not conforming to the requirements of this contract documents, whether in place or not, shall be rejected and removed immediately from the site of work unless otherwise permitted by the Project Manager in writing. No rejected material which has subsequently been made to conform shall be used unless and until written acceptance has been given by the Project Manager. If the Contractor fails to comply forthwith with any order of the Project Manager made under the provisions of this Section 6.7, NON-CONFORMING MATERIALS the Project Manager shall have the authority to remove and replace non-conforming materials and charge the cost of removal and replacement to the Contractor.

6.8 HANDLING MATERIALS. Contractor shall handle all materials to preserve their quality and fitness for work. Transport aggregates from the source or storage site to the work in tight vehicles to prevent loss or segregation of materials after loading and measuring.

6.9 STORAGE OF MATERIALS. Contractor shall store all materials to preserve their quality and fitness for the work. Unless otherwise provided, any portion of the project site within the Project Contract Limit not required for public travel may be used for storage purposes and for the Contractor's plant and equipment. Any additional space required shall be provided by the Contractor at its expense subject to the Project Manager's acceptance. Contractor shall store materials on wooden platforms or other hard, clean surfaces and covered to protect it from the weather and damage. Stored materials shall be located to allow prompt inspection.

6.10 PROPERTY RIGHTS IN MATERIALS. Nothing in the contract shall be construed to vest in the Contractor any right to any materials and equipment after such materials and equipment have been attached, affixed to, or placed in the work.

6.11 ANTITRUST CLAIMS. The STATE and the CONTRACTOR recognized that in actual economic practice, overcharges resulting from antitrust violations are in fact usually borne by the purchaser. Therefore, the CONTRACTOR hereby assigns to STATE any and all claims for overcharges as to goods and material purchased in connection with this Contract, except as to overcharges which result from violations commencing after the price is established under this Contract and which are not passed on to the STATE under an escalation clause.

~END OF SECTION 6~

ARTICLE 7: PROSECUTION AND PROGRESS (Including Legal Relations and Responsibility)

7.1 PROSECUTION OF THE WORK

7.1.1 After approval of the Contract by the Chairman, a Notice to Proceed will be given to the Contractor as described in Section 3.10, NOTICE TO PROCEED. The Notice to Proceed will indicate the date the Contractor is expected to begin the construction and from which date contract time will be charged.

7.1.2 The Contractor shall begin work no later than ten (10) working days from the date in the Notice to Proceed and shall diligently prosecute the same to completion within the contract time allowed. The Contractor shall notify the Project Manager at least three (3) working days before beginning work.

7.1.3 If any subsequent suspension and resumption of work occurs, the Contractor shall notify the Project Manager at least twenty-four (24) hours before stopping or restarting actual field operations.

7.1.4 WORKING PRIOR TO NOTICE TO PROCEED. The Contractor shall not begin work before the date in the Notice to Proceed. Should the Contractor begin work before receiving the Notice to Proceed, any work performed in advance of the specified date will be considered as having been done at the Contractor's risk and as a volunteer and subject to the following conditions:

7.1.4.1 Under no circumstances shall the Contractor commence work on site until it has notified the Project Manager of its intentions and has been advised by the Project Manager in writing that the project site is available to the Contractor. The project site will not be made available until the Contractor has complied with commencement requirements under Section 7.2, COMMENCEMENT REQUIREMENTS.

7.1.4.2 In the event the contract is not executed, the Contractor shall, at its own expense, do such work as is necessary to leave the site in a neat condition to the satisfaction of the Project Manager. The Contractor shall not be reimbursed for any work performed.

7.1.4.3 All work done prior to the Notice to Proceed shall be performed in accordance with the Contract Documents, but will only be considered authorized work and be paid for as provided in the Contract after the Notice to Proceed is issued.

7.1.5 For repairs and/or renovations of existing buildings, unless otherwise permitted by the Project Manager, the Contractor shall not commence with the physical construction unless all or sufficient amount of materials are available for either continuous construction or completion of a specified portion of the work. When construction is started, the Contractor shall work expeditiously and pursue the work diligently until it is complete. If only a portion of the work is to be done in stages, the Contractor shall leave the area safe and usable for the user agency at the end of each stage.

7.2 COMMENCEMENT REQUIREMENTS. Prior to beginning work on site, the Contractor shall submit the following to the Project Manager:

7.2.1 Identification of the Superintendent or authorized representative on the job site. Refer to Section 5.9, COOPERATION BETWEEN THE CONTRACTOR AND THE DEPARTMENT;

7.2.1.1 Identification of the surveyor who shall be licensed in the State of Hawaii and will work for it throughout the course of the project. Refer to Section 5.9.3.4.

7.2.2 Proposed Working Hours on the job. Refer to Section 7.5, NORMAL WORKING HOURS;

7.2.3 Permits and Licenses. Refer to Section 7.4, PERMITS AND LICENSES;

7.2.4 Schedule of Prices to be accepted for the agreed Monthly Payment Application. Unless the proposal provides unit price bids on all items in this project, the successful Bidder will be required, after the award of contract, to submit a schedule of prices for the various items of construction included in the contract. For projects involving more than a single building and / or facility, the breakdown cost shall reflect a separate schedule of prices for the various items of work for each building and/or facility. The sum of the prices submitted for the various items must equal the lump sum bid in the Bidder's proposal. This schedule will be subject to acceptance by the Project Manager who may reject same and require the Bidder to submit another or several other schedules if in the Project Manager's opinion the prices are unbalanced or not sufficiently detailed. This schedule of prices shall be used for the purpose of determining the value of monthly payments due the Contractor for work installed complete in place; and may be used as the basis for determining cost and credit of added or deleted items of work, respectively;

7.2.4.1 The Contractor shall estimate at the close of each month the percentage of work completed under each of the various construction items during such month and submit the Monthly Payment Application to the Project Manager for review and approval. The Contractor shall be paid the approved percentage of the price established for each item less the retention provided in Section 8.4, PROGRESS AND/OR PARTIAL PAYMENTS; and

7.2.5 PROOF OF INSURANCE COVERAGE. Certificate of Insurance or other documentary evidence satisfactory to the Project Manager that the Contractor has in place all insurance coverage required by the contract. Refer to Section 7.3, INSURANCE REQUIREMENTS.

7.2.6 Until such time as the above items are processed and approved, the Contractor shall not be allowed to commence on any operations unless authorized by the Project Manager.

7.3 INSURANCE REQUIREMENTS

7.3.1 OBLIGATION OF CONTRACTOR. Contractor shall not commence any work until it obtains, at its own expense, all required herein insurance. Such insurance shall be provided by an insurance company authorized by the laws of the State to issue such insurance in the State of Hawaii. Coverage by a “Non-Admitted” carrier is permissible provided the carrier has a Best’s Rating of “A-VII” or better.

7.3.2 All insurance described herein will be maintained by the Contractor for the full period of the contract and in no event will be terminated or otherwise allowed to lapse prior to written certification of final acceptance of the work by the Department.

7.3.3 Certificate(s) of Insurance acceptable to the Department shall be filed with the Project Manager prior to commencement of the work. Certificates shall identify if the insurance company is a “captive” insurance company or a “Non-Admitted” carrier to the State of Hawaii. The Best’s rating must be stated for the “Non-Admitted” carrier. Certificates shall contain a provision that coverage(s) being certified will not be cancelled or materially changed without giving the Project Manager at least thirty (30) days prior written notice. The Department is to be named as Additional Insured on any of the required insurance and it shall be so noted on the certificate. Should any policy be cancelled before final acceptance of the work by the Department, and the Contractor fails to immediately procure replacement insurance as specified, the Department, in addition to all other remedies it may have for

such breach, reserves the right to procure such insurance and deduct the cost thereof from any money due to the Contractor.

7.3.4 Nothing contained in these insurance requirements is to be construed as limiting the extent of Contractor's responsibility for payment of damages resulting from its operations under this Contract, including the Contractor's obligation to pay liquidated damages, nor shall it affect the Contractor's separate and independent duty to defend, indemnify and hold the Department harmless pursuant to other provisions of this Contract. In no instance will the Department's exercise of an option to occupy and use completed portions of the work relieve the Contractor of its obligation to maintain the required insurance until the date of final acceptance of the work.

7.3.5 All insurance described herein shall be primary and cover the insured for all work to be performed under the Contract, all work performed incidental thereto or directly or indirectly connected therewith, including traffic detour work or other work performed outside the work area and all change order work.

7.3.6 The Contractor shall, from time to time, furnish the Project Manager, when requested, satisfactory proof of coverage of each type of insurance required covering the work. Failure to comply with the Project Manager's request may result in suspension of the work, and shall be sufficient grounds to withhold future payments due the Contractor and to terminate the contract for Contractor's default.

7.3.7 TYPES OF INSURANCE. Contractor shall purchase and maintain insurance described below which shall provide coverage against claims arising out of the Contractor's operations under the Contract, whether such operations be by the Contractor itself or by any subcontractor or by anyone directly or indirectly employed by any of them or by anyone for whose acts any of them may be liable.

7.3.7.1 WORKER'S COMPENSATION. The Contractor shall obtain worker's compensation insurance for all persons whom they employ in carrying out the work under this contract. This insurance shall be in strict conformity with the requirements of the most current and applicable State of Hawaii Worker's Compensation Insurance laws in effect on the date of the execution of this contract and as modified during the duration of the contract.

7.3.7.2 COMMERCIAL GENERAL LIABILITY INSURANCE AND AUTOMOBILE INSURANCE. Contractor's commercial general liability insurance and automobile liability insurance shall both be obtained in a combined, single limit of not less than $1,000,000 (one million dollars) unless otherwise indicated in the Special Conditions per occurrence that shall include coverage for bodily injury, sickness, disease or death of any person, arising directly or indirectly out of, in connection with, the performance of work under this contract.

7.3.7.3 "General Liability and Automobile Insurance. CONTRACTOR shall maintain, at its own expense, the minimum insurance coverage specified below, or as amended in the Special Conditions, throughout the term of this Contact.

a. General Liability insurance providing coverage of no less than ONE MILLION DOLLARS ($1,000,000.00) per occurrence and TWO MILLION DOLLARS ($2,000,000.00) in the aggregate.
b. Automobile insurance providing coverage of no less than ONE MILLION DOLLARS ($1,000,000.00) per accident."

7.3.7.4 The Contractor shall either (a) Require each of its subcontractors to procure and to maintain during the life of its subcontract, subcontractor's comprehensive general liability, automobile liability and

property damage liability insurance of the type and in the same amounts specified herein; or (b) Insure the activities of its subcontractors in its own policy.

7.3.7.5 BUILDERS RISK INSURANCE. Unless excluded by the Special Conditions of this contract, the Contractor shall provide builder's risk insurance during the progress of the work and until final acceptance by the Department upon completion of the contract. It shall be "All Risk" (including but not limited to earthquake, windstorm and flood damage) completed value insurance coverage on all completed work and work in progress to the full replacement value thereof. Such insurance shall include the Department as an additional named insured. The Contractor shall submit to the Project Manager for its approval all items deemed to be uninsurable. The policy may provide for a deductible in an amount of up to twenty five percent (25%) of the amount insured by the policy. With respect to all losses up to any deductible amount, the relationship between the Contractor and the Department shall be that of insurer and the additional insured respectively as if no deductible existed. The Contractor is responsible for theft, if any item of the contract is stolen prior to, or after installation, until the work is accepted by the Department. Progress payment does not constitute acceptance.

7.4 PERMITS AND LICENSES

7.4.1 The Department or its representative may process Federal (e.g. Army Corps of Engineers), State and county permit applications. The Contractor shall pick up the preprocessed Permits at the appropriate governmental agency and pay the required fees. Other permits necessary for the proper execution of the work such as utility connection permits, elevator installation permits etc., unless processed by the Department and paid for by the Contractor, shall be obtained and paid for by the Contractor.

7.4.2 Until such time as the above permits are approved, the Contractor shall not be allowed to commence any operations without written approval of the Project Manager.

7.4.3 The Project Manager reserves the right to waive application and processing of the building permit.

7.5 NORMAL WORKING HOURS. Prior to beginning operations, unless otherwise established by the Department, the Contractor shall notify the Project Manager in writing of the time in hours and minutes, A.M. and P.M. respectively, at which it desires to begin and end the day's work. If the Contractor desires to change the working hours, it shall request the Project Manager's approval three (3) consecutive working days prior to the date of the change.

7.6 HOURS OF LABOR (§104-2 HRS)

7.6.1 No laborer or mechanic employed on the job site of any public work of the Department or any political sub-division thereof shall be permitted or required to work on Saturday, Sunday or a legal holiday of the State or in excess of eight (8) hours on any other day unless the laborer or mechanic receives overtime compensation for all hours worked on Saturday, Sunday and a legal holiday of the State or in excess of eight (8) hours on any other day. For the purposes of determining overtime compensation under this Section 7.6, HOURS OF LABOR (§104-2 HRS) the basic hourly rate of any laborer or mechanic shall not be less than the basic hourly rate determined by the Department of Labor and Industrial Relations to be the prevailing basic hourly rate for corresponding classes of laborers and mechanics on projects of similar character in the Department.

7.6.2 Overtime compensation means compensation based on one and one-half times the laborers or mechanics basic hourly rate of pay plus the cost to an employer of furnishing a laborer or mechanic with fringe benefits.

7.7 PREVAILING WAGES (State §104-2 HRS & Federal Davis-Bacon)

7.7.1 The Contractor shall at all time observe and comply with all provisions of Chapter 104, HRS, the significant requirements of which are emphasized in the Department of Labor and Industrial Relations Publication No. H104-3 entitled "Requirements of Chapter 104, Hawaii Revised Statutes, Wages and Hours of Employees on Public Works Law". The Contractor must also comply with all provisions of Federal Davis-Bacon Act (40 U.S.C. 276-276a-5 and Code of Federal Regulation (CFR) Title 29 and related Acts.

7.7.2 WAGE RATE SCHEDULE. The wage rate schedule may not be physically enclosed in the bid documents. However, the wage rate schedule is incorporated herein by reference and made a part of the Bid and Contract Documents. The bidder must obtain and use the latest minimum rates ten (10) days prior to the date set for the bid opening of bids. The wage rate schedule may be obtained from the DHHL, Labor Compliance Specialist, Hale Kalanianaole, 91-5420 Kapolei Parkway, Kapolei, Hawaii, 96707 or, State Department of Labor and Industrial Relations web site:

http://labor.hawaii.gov/rs/home/wages/72-2/

or the Federal Department of Labor (Davis- Bacon) wage rate schedule web site:

http://www.wdol.gov.

7.7.3 The Contractor or its subcontractor(s) shall pay all laborers and mechanics employed on the job site, unconditionally and not less often than once a week, and without deduction or rebate on any account except as allowed by law, the full amounts of their wages including overtime, accrued to not more than five (5) working days prior to the time of payment, at wage rates not less than those stated in the contract, regardless of any contractual relationship which may be alleged to exist between the Contractor and subcontractor and such laborers and mechanics. The wages stated in the contract shall not be less than the minimum prevailing wages (basic hourly rate plus fringe benefits), as determined by the of Labor and Industrial Relations and published in wage rate schedules. Any increase in wage rates, as determined by the of Labor and Industrial Relations and issued in the wage rate schedule, shall be applicable during the performance of the contract, in accordance with Section 104-2(a) and (b), Hawaii Revised Statutes. Notwithstanding the provisions of the original contract, if the of Labor and Industrial Relations determines that prevailing wages have increased during the performance of the contract, the rate of pay of laborers and mechanics shall be raised accordingly.

7.7.4 The applicable wage rate schedule shall be physically included in the Contract Documents executed by the successful Bidder.

7.7.5 POSTING WAGE RATE SCHEDULE. The rates of wages to be paid shall be posted by the Contractor in a prominent and easily accessible place at the job site and a copy of such wages required to be posted shall be given to each laborer and mechanic employed under the contract by the Contractor at the time the person is employed thereunder, provided that where there is a collective bargaining agreement, the Contractor does not have to provide its employees the wage rate schedules. Any revisions to the schedule of wages issued by the Department of Labor and Industrial Relations during the course of the Contract shall also be posted by the Contractor and a copy provided to each laborer and mechanic employed under the Contract as required above.

7.7.6 The Chairman may withhold from the Contractor so much of the accrued payments as the Chairman may consider necessary to pay to laborers and mechanics employed by the Contractor or any

subcontractor on the job site. The accrued payments withheld shall be the difference between the wages required by this Contract and the wages actually received by such laborers or mechanics.

7.8 FAILURE TO PAY REQUIRED WAGES (§104-4, HRS or Federal Davis-Bacon). If the Department finds that any laborer or mechanic employed on the job site by the Contractor or any subcontractor has been or is being paid wages at a rate less than the required rate by the Contract, or has not received their full overtime compensation, the Department may, by written notice to the Contractor, terminate its right, or the right of any subcontractor, to proceed with the work or with the part of the work on which the required wages or overtime compensation have not been paid and may complete such work or part by contract or otherwise, and the Contractor and its sureties shall be liable to the Department for any excess costs occasioned thereby.

7.9 PAYROLLS AND PAYROLL RECORDS (§104-3 HRS)

7.9.1 A certified copy of each weekly payroll shall be submitted to the Chairman within seven (7) calendar days after the end of each weekly payroll period. Failure to do so on a timely basis shall be cause for withholding of payments, termination of the contract, and/or debarment. The Contractor shall be responsible for the timely submission of certified copies of payrolls of all subcontractors. The certification shall affirm that payrolls are correct and complete, that the wage rates contained therein are not less than the applicable rates contained in the wage determination decision, any amendments thereto during the period of the contract, and that the classifications set forth for each laborer and mechanic conform with the work they performed.

7.9.2 Payroll records for all laborers and mechanics working at the site of the work shall be maintained by the General Contractor and its subcontractors, if any, during the course of the work and preserved for a period of four (4) years thereafter. Such records shall contain the name of each employee, their address, their correct classification, rate of pay, daily and weekly number of hours worked, itemized deductions made and actual wages paid. Such records shall be made available for inspection at a place designated by the Chairman, the U.S. Department of Labor and any authorized persons who may also interview employees during working hours on the job site.

7.9.3 Note that the falsification of certifications noted in this Section 7.9, PAYROLLS AND PAYROLL RECORDS (§104-3 HRS) may subject the Contractor or subcontractor to penalties and debarment under the laws referenced in Section 7.14, LAWS TO BE OBSERVED and / or criminal prosecution.

7.10 OVERTIME AND NIGHT WORK

7.10.1 Overtime work shall be considered as work performed in excess of eight (8) hours in any one (1) day or work performed on Saturday, Sunday or legal holiday of the State. Overtime and night work are permissible when approved by the Project Manager in writing, or as called for elsewhere within these Contract Documents.

7.10.2 OVERTIME NOTIFICATION. Contractor shall inform the Project Manager in writing at least two (2) working days in advance as to exactly what specific work is to be done during any overtime and night period to ensure that proper inspection will be available.

7.10.3 In the event that work other than that contained in the above notification is performed and for which the Project Manager determines Department inspection services were necessary but not available because of the lack of notification, the Contractor may be required to remove all such work and perform the work over again in the presence of Department inspection personnel.

7.10.4 Any hours worked in excess of the normal eight (8) working hours per day or on Saturdays, Sundays or legal State holidays will not be considered a working day.

7.10.5 The Department hereby reserves the right to cancel the overtime, night, Saturday, Sunday or legal State holiday work when it is found that work during these periods is detrimental to the public welfare or the user agency.

7.11 OVERTIME AND NIGHT PAYMENT FOR DEPARTMENT INSPECTION SERVICE

7.11.1 Whenever the Contractor's operations require the Department's inspection and staff personnel to work overtime or at night, the Contractor shall reimburse the Department for the cost of such services unless otherwise instructed in the Contract. The Project Manager will notify the Contractor of the minimum number of required Department employees and other personnel engaged by the Department prior to the start of any such work. The costs chargeable to the Contractor shall include but not be limited to the following:

7.11.1.1 The cost of salaries which are determined by the Department and includes overtime and night time differential for the Department's staff and inspection personnel. In addition to the cost of the salaries, the Contractor shall reimburse the Department's share of contributions to the employee's retirement, medical plan, social security, vacation, sick leave, worker's compensation funds, per diem, and other applicable fringe benefits and overhead expenses;

7.11.1.2 The transportation cost incurred by the Department's staff and inspection personnel which are based on established rental rates or mileage allowance in use by the Department for the particular equipment or vehicle; and/or

7.11.1.3 Fees and other costs billed the Department by Consultants engaged on the project for overtime and/or night time work.

7.11.2 PAYMENT FOR INSPECTION SERVICES. The monies due the Department for staff and inspection work and use of vehicles and equipment as determined in Subsection 7.11.1, OVERTIME AND NIGHT PAYMENT FOR DEPARTMENT INSPECTION SERVICE shall be deducted from the monies due or to become due the Contractor. In any and all events, the Contractor shall not pay the Department's employees directly.

7.12 LIMITATIONS OF OPERATIONS

7.12.1 Contractor shall at all times conduct the work in such manner and in such sequence as will ensure the least practicable interference with pedestrian and motor traffic passageways. The Contractor shall furnish convenient detours and provide and plan other appropriate signs, flashers, personnel, warnings, barricades and other devices for handling pedestrian and motor traffic.

7.12.2 In the event that other contractors are also employed on the job site, the Contractor shall arrange its work and dispose of materials so as not to interfere with the operations of the other contractors engaged upon adjacent work. The Contractor shall join its work to that of others and existing buildings in a proper manner, and in accordance with the drawings and specifications, and perform its work in the proper sequence in relation to that of others, all as may be directed by the Project Manager.

7.12.3 Each Contractor shall be responsible for any damage done by it to work performed by another contractor. Each Contractor shall conduct its operations and maintain the work in such condition that no fugitive dust shall be created and adequate drainage shall be in effect at all times.

7.12.4 In the event that the Contractor fails to prosecute its work as provided in this Section 7.12, LIMITATIONS OF OPERATIONS or disregards the directions of the Project Manager, the Project Manager may suspend the work until such time as the Contractor provides for the prosecution of the work with minimum interference to traffic and passageways or other contractors, dust control, adequate drainage, the repair of damage and complies with the direction of the Project Manager. No payment will be made to the Contractor for the costs of such suspension.

7.13 ASSIGNMENT OR CHANGE OF NAME (§3-125-14 HAR)

7.13.1 SUBCONTRACTS AND ASSIGNMENT. The CONTRACTOR shall not assign or subcontract any of the CONTRACTOR's duties, obligations, or interests under this Contract and no such assignment or subcontract shall be effective unless (i) the CONTRACTOR obtains the prior written consent of the STATE and (ii) the CONTRACTOR's assignee or subcontractor submits to the STATE a tax clearance certificate from the of Taxation, State of Hawaii, showing that all delinquent taxes, if any, levied or accrued under state law against the CONTRACTOR's assignee or subcontractor have been paid. Additionally, no assignment by the CONTRACTOR of the CONTRACTOR's right to compensation under this Contract shall be effective unless and until the assignment is approved by the Comptroller of the State of Hawaii, as provided in Section 40-58, HRS.

7.13.2 RECOGNITION OF A SUCCESSOR IN INTEREST. When in the best interest of the State, a successor in interest may be recognized in an assignment Contract in which the STATE, the CONTRACTOR and the assignee or transferee (hereinafter referred to as the "Assignee") agree that:

7.13.2.1 The Assignee assumes all of the CONTRACTOR's obligations;

7.13.2.2 The CONTRACTOR remains liable for all obligations under this Contract but waives all rights under this Contract as against the STATE; and

7.13.2.3 The CONTRACTOR shall continue to furnish, and the Assignee shall also furnish, all required bonds.

7.13.3 CHANGE OF NAME. When the CONTRACTOR asks to change the name in which it holds this Contract with the STATE, the procurement officer of the purchasing agency (hereinafter referred to as the "Agency procurement officer") shall, upon receipt of a document acceptable or satisfactory to the Agency procurement officer indicating change of name (for example, an amendment to the CONTRACTOR's articles of incorporation), enter into an amendment to this Contract with the CONTRACTOR to effect such a change of name. The amendment to this Contract changing the CONTRACTOR's name shall specifically indicate that no other terms and conditions of this Contract are thereby changed.

7.13.4 REPORTS. All assignment Contracts and amendments to this Contract effecting changes of the CONTRACTOR's name or novations hereunder shall be reported to the CPO within thirty days of the date that the assignment Contract or amendment becomes effective.

7.13.5 ACTIONS AFFECTING MORE THAN ONE PURCHASING AGENCY. Notwithstanding the provisions of Subsections 7.13.2 through 7.13.4 herein, when the CONTRACTOR holds Contracts

with more than one purchasing agency of the State, the assignment Contracts and the novation and change of name amendments herein authorized shall be processed only through the CPO's office.

7.14 LAWS TO BE OBSERVED. The CONTRACTOR shall comply with all federal, state, and county laws, ordinances, codes, rules, and regulations, as the same may be amended from time to time, that in any way affect the CONTRACTOR's performance of this Contract.

7.14.1 The Contractor at all times shall observe and comply with all Federal, State and local laws or ordinances, rules and regulations which in any manner affect those engaged or employed in the work, the materials used in the work, and the conduct of the work. The Contractor shall also comply with all such orders and decrees of bodies or tribunals having any jurisdiction or authority over the work. Any reference to such laws, ordinances, rules and regulations shall include any amendments thereto before and after the date of this Contract.

7.14.2 The Contractor shall defend, protect, hold harmless and indemnify the State and its departments and agencies and all their officers, representatives, employees or agents against any claim or liability arising from or based on the violation of any such laws, ordinances, rules and regulations, orders or decrees, whether such violation is committed by the Contractor or its Subcontractor(s) or any employee of either or both. If any discrepancy or inconsistency is discovered in the contract for the work in relation to any such laws, ordinances, rules and regulations, orders or decrees, the Contractor shall forthwith report the same to the Project Manager in writing.

7.14.3 While the Contractor must comply with all applicable laws, attention is directed to: Wage and Hours of Employees on Public Works, Chapter 104, Hawaii Revised Statutes (HRS); Hawaii Public Procurement Code, Authority to debar or suspend, Section 103D-702, HRS; Hawaii Employment Relations Act, Chapter 377, HRS; Hawaii Employment Security Law, Chapter 383, HRS; Worker's Compensation Law, Chapter 386, HRS; Wage and Hour Law, Chapter 387, HRS; Occupational Safety and Health, Chapter 396, HRS; and Authority to Debar or Suspend, Chapter 126, subchapter 2, Hawaii Administrative Rules (HAR).

7.14.4 CONFLICT BETWEEN GENERAL CONDITIONS AND PROCUREMENT RULES. In the event of a conflict between the General Conditions and the Procurement Rules, the Procurement Rules in effect on the date this Contract became effective shall control and are hereby incorporated by reference.

7.15 PATENTED DEVICES, MATERIALS AND PROCESSES. If the Contractor desires to use any design, device, material, or process covered by letters of patent or copyright, the right for such use shall be procured by the Contractor from the patentee or owner. The Contractor shall defend, protect, indemnify and hold harmless the State of Hawaii, the contracting agency, and their officers, employees, and agents from and against all liability, loss, damage, cost, and expense, including attorney' fees, and all claims, suits, and demands arising out of or resulting from any claims, demands, or actions by the patent holder for infringement or other improper or unauthorized use of any patented article, patented design, patented device, patented process, patented appliance or patented material in connection with this Contract. The Contractor shall be solely responsible for correcting or curing to the satisfaction of the DHHL any such infringement or improper or unauthorized use, including, without limitation: (a) furnishing at no cost to the DHHL a substitute article, design, device, process, appliance or material acceptable to the DHHL; (b) paying royalties or other required payments to the patent holder; (c) obtaining proper authorizations or releases from the patent holder; and (d) furnishing such security to or making such arrangement with the patent holder as may be necessary to correct or cure any such infringement or improper or unauthorized use. This

section shall not apply to any article, design, device, material, appliance or process covered by letters of patent or copyright, which the Contractor is required to use by the Drawings or Specifications.

7.16 SANITARY, HEALTH AND SAFETY PROVISIONS

7.16.1 The Contractor shall provide and maintain in a neat, sanitary condition such accommodations for the use of its employees as may be necessary to comply with the requirements of the State and local boards of health, or other bodies or tribunals having jurisdiction. Unless otherwise stated in the drawings or specifications, the Contractor shall install toilet facilities conveniently located at the job site and maintain same in a neat and sanitary condition for the use of the employees on the job site for the duration of the Contract. The toilet facilities shall conform to the requirements of the State Department of Health. The cost of installing, maintaining and removing the toilet facilities shall be considered incidental to and paid for under various contract pay items for work or under the lump sum bids as the case may be, and no additional compensation will be made therefor. These requirements shall not modify or abrogate in any way the requirements or regulations of the State Department of Health.

7.16.2 Attention is directed to Federal, State and local laws, rules and regulations concerning construction safety and health standards. The Contractor shall not require any worker to work in surroundings or under conditions which are unsanitary, hazardous or dangerous to their health or safety.

7.17 PROTECTION OF PERSONS AND PROPERTY

7.17.1 SAFETY PRECAUTIONS AND PROGRAMS. The Contractor shall be responsible for initiating, maintaining and supervising all safety precautions and programs in connection with the performance of the Contract. The Contractor shall take reasonable precautions for the safety of, and shall provide reasonable protection to prevent damage, injury or loss to:

7.17.1.1 All persons on the work site or who may be affected by the work;

7.17.1.2 All the work and materials and equipment to be incorporated therein, whether in storage on or off the site, under care, custody or control of the Contractor and its subcontractors; and

7.17.1.3 Other property at the site or adjacent thereto, including trees, shrubs, lawns, walks, pavement, roadways, structures and utilities not designated for removal, relocation or replacement in the course of construction.

7.17.2 Contractor shall give notices and comply with applicable laws, ordinances, regulations, rules, and lawful orders of any public body having jurisdiction for the safety of persons or property or their protection from damage, injury or loss; and the Contractor shall erect and maintain reasonable safeguards for safety and protection, including posting danger signs, or other warnings against hazards.

7.17.3 The Contractor shall notify owners of adjacent properties and of underground (or overhead) utilities when performing work which may affect the owners; and shall cooperate with the owners in the protection, removal and replacement of their property.

7.17.4 All damage, injury or loss to any property referred to in Subsections 7.17.1.2 and 7.17.1.3 caused by the fault or negligence or damage or loss attributable to acts or omissions directly or indirectly in whole or part by the Contractor a subcontractor or any one directly or indirectly employed by them, or by anyone for whose acts they might be liable, shall be remedied promptly by the Contractor.

7.17.5 The Contractor shall designate a responsible member of the Contractor's organization at the site whose duty shall be the protection of accidents. This person shall be the Contractor's superintendent unless otherwise designated by the Contractor.

7.17.6 The Contractor shall not load or permit any part of the construction to be loaded so as to endanger its safety. The Contractor shall not injure or destroy trees or shrubs nor remove or cut them without permission of the Project Manager. Contractor shall protect all land monuments and property marks until an authorized agent has witnessed or otherwise referenced their location and shall not remove them until directed.

7.17.7 In the event the Contractor encounters on the site, material reasonably believed to be asbestos or other hazard material that has not been rendered harmless, the Contractor shall stop work in the area and notify the Project Manager promptly. The work in the affected area shall be resumed in the absence of hazard materials or when the hazard has been rendered harmless.

7.17.8 EMERGENCIES. In an emergency affecting the safety and protection of persons or the work or property at the site or adjacent thereto, Contractor without special instructions or authorization from the Project Manager, shall act, at the Contractor's discretion, to prevent threatened damage, injury or loss. Contractor shall give the Project Manager prompt written notice of the emergency and actions taken. Additional compensation or extension of time claimed by the Contractor on account of an emergency shall be determined under the provisions of Section 7.25, DISPUTES AND CLAIMS.

7.18 ARCHAEOLOGICAL SITES

7.18.1 Should historic sites such as walls, platforms, pavements and mounds, or remains such as artifacts, burials, concentration of charcoal or shells be encountered during construction, work shall cease in the immediate vicinity of the find and the find shall be protected from further damage. The Contractor shall immediately notify the Project Manager and contact the State Historic Preservation Division which will assess the significance of the find and recommend the appropriate mitigation measures, if necessary.

7.18.2 When required, the Contractor shall provide and install any temporary fencing to protect archaeological sites within the project. The fencing shall be installed prior to any construction activity and shall be maintained by the Contractor for the duration of the project. Fence installation and maintenance shall be to the satisfaction of the Project Manager. The Contractor shall remove the fencing upon completion of construction, or as directed by the Project Manager.

7.18.3 No work shall be done within the temporary fencing area. If any construction work is done within the temporary fencing, the Contractor shall notify the Project Manager immediately; and if the Contractor entered the archaeological site area without permission, it shall stop work in this area immediately. The Project Manager shall notify the archaeologist to assess any damage to the area. The Contractor shall allow the archaeologist sufficient time to perform the field investigation.

7.18.4 Any site requiring data recovery within the project shall not be disturbed until data recovery is completed.

7.19 RESPONSIBILITY FOR DAMAGE CLAIMS; INDEMNITY

7.19.1 The CONTRACTOR shall defend, indemnify, and hold harmless the State of Hawaii, the contracting agency, and their officers, employees, and agents from and against all liability, loss, damage, cost,

and expense, including all attorneys' fees, and all claims, suits, and demands therefor, arising out of or resulting from the acts or omissions of the CONTRACTOR or the CONTRACTOR's employees, officers, agents, or subcontractors under this Contract. The provisions of this Subsection shall remain in full force and effect notwithstanding the expiration or early termination of this Contract.

7.19.2 The Contractor agrees that it will not attempt to hold the State and the Department, their officers, representatives, employees or agents, liable or responsible for any losses or damages to third parties from the action of the elements, the nature of the work to be done under these Contract Documents or from any unforeseen obstructions, acts of God, vandalism, fires or encumbrances which may be encountered in the prosecution of the work.

7.19.3 The Contractor shall pay all just claims for materials, supplies, tools, labor and other just claims against the Contractor or any subcontractor in connection with this contract and the surety bond will not be released by final acceptance and payment by the Department unless all such claims are paid or released. The Department may, but is not obligated to, withhold or retain as much of the monies due or to become due the Contractor under this contract considered necessary by the Project Manager to cover such just claims until satisfactory proof of payment or the establishment of a payment plan is presented.

7.19.4 The Contractor shall defend, indemnify and hold harmless the State and the Department, their officers, representatives, employees or agents from all suits, actions or claims of any character brought on account of any claims or amounts arising out of or recovered under the Workers' Compensation Laws or violation of any other law, by-law, ordinance, order or decree.

7.19.5 COST OF LITIGATION. In case the STATE shall, without any fault on its part, be made a party to any litigation commenced by or against the CONTRACTOR in connection with this Contract, the CONTRACTOR shall pay all costs and expenses incurred by or imposed on the STATE, including attorneys' fees.

7.20 CHARACTER OF WORKERS OR EQUIPMENT

7.20.1 The Contractor shall at all times provide adequate supervision and sufficient labor and equipment for prosecuting the work to full completion in the manner and within the time required by the contract.

7.20.2 Character and Proficiency of Workers - All workers shall possess the proper license and/or certification, job classification, skill and experience necessary to properly perform the work assigned to them. All workmen engaged in special work or skilled work, such as bituminous courses or mixtures, concrete pavement or structures, electrical installation, plumbing installation, or in any trade shall have sufficient experience in such work and in the operation of the equipment required to properly and satisfactorily perform all work. All workers shall make due and proper effort to execute the work in the manner prescribed in these Contract Documents, otherwise, the Project Manager may take action as prescribed herein.

7.20.2.1 Any worker employed on the project by the Contractor or by any subcontractor who, in the opinion of the Project Manager, is not careful and competent, does not perform its work in a proper and skillful manner or is disrespectful, intemperate, disorderly or neglects or refuses to comply with directions given, or is otherwise objectionable shall at the written request of the Project Manager, be removed forthwith by the Contractor or subcontractor employing such worker and shall not be employed again in any portion of the work without the written consent of the Project Manager. Should the Contractor or subcontractor continue to employ, or again employ such person or persons on the project, the

Project Manager may withhold all payments which are or may become due, or the Project Manager may suspend the work until the Project Manager's orders are followed, or both.

7.20.3 INSUFFICIENT WORKERS. A sufficient number of workers shall be present to ensure the work is accomplished at an acceptable rate. In addition, the proper ratio of apprentice to journey worker shall be maintained to ensure the work is properly supervised and performed. In the event that the Project Manager finds insufficient workers are present to accomplish the work at an acceptable rate of progress or if a adequate number of journey workers are not present and no corrective action is taken by the Contractor after being informed in writing, the Chairman may terminate the Contract as provided for under Section 7.27, TERMINATION OF CONTRACT FOR CAUSE.

7.20.4 EQUIPMENT REQUIREMENTS. All equipment furnished by the Contractor and used on the work shall be of such size and of such mechanical condition that the work can be performed in an acceptable manner at a satisfactory rate of progress and the quality of work produced will be satisfactory.

7.20.4.1 Equipment used on any portion of the project shall be such that no injury to the work, persons at or near the site, adjacent property or other objects will result from its use.

7.20.4.2 If the Contractor fails to provide adequate equipment for the work, the contract may be terminated as provided under Section 7.27, TERMINATION OF CONTRACT FOR CAUSE.

7.20.4.3 In the event that the Contractor furnishes and operates equipment on a force account basis, it shall be operated to obtain maximum production under the prevailing conditions.

7.21 CONTRACT TIME

7.21.1 Time is of the essence for this Contract.

7.21.2 CALCULATION OF CONTRACT TIME. When the contract time is on a working day basis, the total contract time allowed for the performance of the work shall be the number of working days shown in the contract plus any additional working days authorized in writing as provided hereinafter. Refer to ARTICLE 1, DEFINITIONS for the definition of Working Day. The count of elapsed working days to be charged against contract time shall begin from the date of the Notice to Proceed and shall continue consecutively to the date of Project Acceptance determined by the Project Manager. When the contract completion time is a fixed calendar date, it shall be the date on which all work on the project shall be completed. Maintenance periods are not included within the contract time unless specifically noted in the Contract Documents. Failure to complete the work by contract completion date shall not terminate the Contract.

7.21.3 MODIFICATIONS OF CONTRACT TIME (§3-125-4 HAR)

7.21.3.1 EXTENSIONS. For increases in the scope for work caused by alterations and additional work made under Section 4.2, CHANGES, the Contractor will be granted a time extension only if the changes increase the time of performance for the Contract. If the Contractor believes an extension of time is justified and is not adequately provided for in a Field Order, it must request the additional time sought in writing when the detailed cost breakdown required by Section 4.2, CHANGES, is submitted. The Contractor must show how the time of performance for the critical path will be affected and must also support the time extension request with schedules and statements from its subcontractors, suppliers, and/or manufacturers. Compensation for any altered or additional work will be paid as provided in Section 4.2, CHANGES.

7.21.3.2 The Department may direct changes to the work at any time until the work is finally accepted. The issuance of a Field Order at any time may alter or modify the contract duration only by the days specified therein; or if not specified therein, for the days the critical path must be extended for the change. Additional time to perform the extra work will be added to the time allowed in the contract without regard to the date the change directive was issued, even if the contract completion date has passed. A change requiring time will not constitute a waiver of pre-existing Contractor delay.

7.21.4 DELAY FOR PERMITS. For delays beyond the control of the Contractor in obtaining necessary permits, one day extension for each day delay may be granted by the Project Manager, provided the Contractor notifies the Project Manager that the permits are not available, as soon as the delay occurs. Time extensions shall be the exclusive relief granted on account of such delays. No additional compensation will be paid for these time extensions.

7.21.5 DELAYS BEYOND CONTRACTOR'S CONTROL. For delays affecting the critical path caused by acts of God, or the public enemy, fire, unusually severe weather, earthquakes, floods, epidemics, quarantine restrictions, labor disputes, freight embargoes and other reasons beyond the Contractor's control, the Contractor may be granted an extension of time provided that:

7.21.5.1 The Contractor notifies the Project Manager in writing within five (5) work days after the occurrence of the circumstances described above and states the possible effects on the completion date of the contract.

7.21.5.2 No time extension will be granted for weather conditions other than unusually severe weather occurrences, and floods.

7.21.5.3 The Contractor, if requested, submits to the Project Manager within ten (10) work days after the request, a written statement describing the delay to the project. The extent of delay must be substantiated as follows:

(a) State specifically the reason or reasons for the delay and fully explain in a detailed chronology the effect of this delay to the work and/or the completion date;
(b) Submit copies of purchase order, delivery tag, and any other pertinent documentation to support the time extension request;
(c) Cite the period of delay and the time extension requested; and
(d) A statement either that the above circumstances have been cleared and normal working conditions restored as of a certain day or that the above circumstances will continue to prevent completion of the project.

7.21.5.4 Time extensions shall be the exclusive relief granted and no additional compensation will be paid the Contractor for such delays.

7.21.6 DELAYS IN DELIVERY OF MATERIALS. For delays in delivery of materials and/or equipment which occur as a result of unforeseeable causes beyond the control and without fault or negligence of the Contractor, its subcontractor(s) or supplier(s), the Contractor may be granted an extension of time provided it complies with the following procedures:

7.21.6.1 The Contractor must notify the Project Manager in writing within five (5) consecutive working days after it first has any knowledge of delays or anticipated delays and state the effects such delays may have on the completion date of the Contract.

7.21.6.2 The Contractor, if requested, must submit to the Project Manager within ten (10) working days after a firm delivery date for the material and equipment is established, a written statement as to the delay to the progress of the project. The delay must be substantiated as follows:

(a) State specifically the reason or reasons for the delay. Explain in a detailed chronology the effect of this delay to the other work and / or the completion date;

(b) Submit copies of purchase order(s), factory invoice(s), bill(s) of lading, shipping manifest(s), delivery tag(s) and any other pertinent correspondence to support the time extension request; and

(c) Cite the start and end date of the delay and the days requested therefore. The delay shall not exceed the difference between the originally scheduled delivery date versus the actual delivery date.

7.21.6.3 Time extensions shall be the exclusive relief granted and no additional compensation will be paid the Contractor on account of such delay.

7.21.7 DELAYS FOR SUSPENSION OF WORK. Delay during periods of suspension of the work by the Project Manager shall be computed as follows:

7.21.7.1 When the performance of the work is totally suspended for one (1) or more days (calendar or working days, as appropriate) by order of the Project Manager in accordance with Subsections 7.24.1.1, 7.24.1.2, 7.24.1.4 or 7.24.1.6 the number of days from the effective date of the Project Manager's order to suspend operations to the effective date of the Project Manager's order to resume operations shall not be counted as contract time and the contract completion date will be adjusted. Should the Contractor claim for additional days in excess of the suspension period, Contractor shall provide evidence justifying the additional time. During periods of partial suspensions of the work, the Contractor will be granted a time extension only if the partial suspension affects the critical path. If the Contractor believes that an extension of time is justified for a partial suspension of work, it must request the extension in writing at least five (5) working days before the partial suspension will affect the critical operation(s) in progress. The Contractor must show how the critical path was increased based on the status of the work and must also support its claim, if requested, with statements from its subcontractors. A suspension of work will not constitute a waiver of pre-existing Contractor delay.

7.21.8 CONTRACTOR CAUSED DELAYS - No time extension will be considered for the following:

7.21.8.1 Delays in performing the work caused by the Contractor, subcontractor and/or supplier;

7.21.8.2 Delays in arrival of materials and equipment caused by the Contractor, subcontractor and / or supplier in ordering, fabricating, delivery, etc.;

7.21.8.3 Delays requested for changes which the Project Manager determines unjustifiable due to the lack of supporting evidence or because the change is not on the critical path;

7.21.8.4 Delays caused by the failure of the Contractor to submit for review and acceptance by the Project Manager, on a timely basis, pricing proposals, shop drawings, descriptive sheets, material samples, color samples, etc. except as covered in Subsection 7.21.5 and 7.21.6;

7.21.8.5 Failure to follow the procedure within the time allowed to qualify for a time extension; and

7.21.8.6 Days the Contractor is unable to work due to normal rainfall or other normal bad weather day conditions.

7.21.9 REDUCTION IN TIME - If the Department deletes any portion of the work, an appropriate reduction of contract time may be made in accordance with Section 4.2, CHANGES.

7.22 CONSTRUCTION SCHEDULE

7.22.1 The Contractor shall submit its detailed construction schedule to the Project Manager prior to the start of the work. The purpose of the schedule is to allow the Project Manager to monitor the Contractor's progress on the work. The schedule shall account for normal inclement weather, unusual soil or other conditions that may influence the progress of the work, schedules and coordination required by any utility, off or on site fabrications, and all other pertinent factors that relate to progress.

7.22.2 Submittal of and the Project Manager's receipt of the construction schedule shall not imply the Department's approval of the schedule's breakdown, its individual elements, and any critical path that may be shown. Any acceptance or approval of the schedule: (1) shall be for general format only and not for sequences or durations thereon; and (2) shall not be deemed an agreement by the Department that the construction means, methods and resources shown on the schedule will result in work that conforms to the contract requirements. The Contractor has the risk of all elements (whether or not shown) of the schedule and its execution.

7.22.3 In the event the Contractor submits and the Department receives an accelerated schedule (shorter than the contract time), such will not constitute an agreement to modify the contract time or completion date, nor will the receipt, acceptance or approval of such a schedule incur any obligation by the Department. The Contractor shall be solely responsible for and shall accept all risks and any delays that may materialize during the construction work until the contract completion date is reached. The contract time or completion date is established for the benefit of the Department and cannot be changed without an appropriate change order issued by the Department. All float on an accelerated schedule belongs exclusively to the Department. The Department will not be responsible for or obligated to accept the work before the completion date established by the Contract.

7.23 STATEMENT OF WORKING DAYS - For all contracts on a working day basis, the Contractor will submit a statement of the number of working days for each month together with the Monthly Payment Application. The Monthly Payment Application will not be processed without the statement of working days.

7.24 SUSPENSION OF WORK (§3-125-7 HAR)

7.24.1 PROCEDURE TO BE FOLLOWED. The Chairman may, by written order to the Contractor, at any time and without notice to any surety, suspend the performance of the work either in whole or in part for any cause, including but not limited to:

7.24.1.1 Weather or excess bad weather days, considered unsuitable by the Project Manager for prosecution of the work; or

7.24.1.2 Soil Conditions considered unsuitable by the Project Manager for prosecution of the work; or 7.24.1.3 Failure of the Contractor to:

(a) Correct conditions unsafe for the general public or for the workers;
(b) Carry out orders given by the Project Manager;
(c) Perform the work in strict compliance with the provisions of the contract; or
(d) Provide a qualified Superintendent on the jobsite as described under Subsection 5.9.2, SUPERINTENDENT.

7.24.1.4 When any redesign is deemed necessary by the Project Manager; or

7.24.1.5 Disturbance due to noise, odors or dust arising from the construction even if such disturbance does not violate the section on Environmental Protection contained in the Contract Documents; or

7.24.1.6 The convenience of the Department.

7.24.2 PARTIAL OR TOTAL SUSPENSION OF WORK. Suspension of work on some but not all items of work shall be considered a partial suspension. Suspension of work on the entire work at the job site shall be considered total suspension. The period of suspension shall be computed as set forth in Subsection 7.21.7, Delays for Suspension of Work.

7.24.3 PAYMENT

7.24.3.1 In the event that the Contractor is ordered by the Chairman in writing as provided herein to suspend all work under the contract in accordance with Subsections 7.24.1.4 or 7.24.1.6, the Contractor may be reimbursed for actual direct costs incurred on work at the jobsite, as authorized in writing by the Chairman, including costs expended for the protection of the work. Payment for equipment which must standby during such suspension of work shall be made as described in clause 8.3.4.5.(e). No payment will be made for profit on any suspension costs. An allowance of five percent (5%) will be paid on any reimbursed actual costs for indirect categories of delay costs, including extended branch and home-office overhead and delay impact costs.

7.24.3.2 However, no adjustment to the contract amount or time shall be made under this Section 7.24, SUSPENSION OF WORK (§3-125-7 HAR) for any suspension, delay, or interruption:

(a) To the extent that performance would have been so suspended, delayed, or interrupted by any other cause, including the fault or negligence of the Contractor; or

(b) For which an adjustment is provided for or excluded under any other provision of this Contract.

7.24.3.3 Any adjustment in contract price made pursuant to this subsection shall be determined in accordance with this Section 7.24, SUSPENSION OF WORK (§3-125-7 HAR) and Section 4.2, CHANGES.

7.24.3.4 Claims for such compensation shall be filed with the Project Manager within ten (10) calendar days after the date of the order to resume work or such claims will be waived by the Contractor. Together with the claim, the Contractor shall submit substantiating documents supporting the entire amount shown on the claim. The Chairman may make such investigations as are deemed necessary and shall be the sole judge of the claim and the Chairman's decision shall be final.

7.24.4 CLAIMS NOT ALLOWED. No claim under this Section 7.24, SUSPENSION OF WORK (§3-125-7 HAR) shall be allowed:

7.24.4.1 For any direct costs incurred more than twenty (20) days before the Contractor shall have notified the Project Manager in writing of any suspension that the Contractor considers compensable. This requirement shall not apply as to a claim resulting from a suspension order under Subsections 7.24.1.4 or 7.24.1.6; and 7.24.4.2 Unless the claim is asserted in writing within ten (10) calendar days after the termination of such suspension, delay, or interruption, but in no case not later than the date of final payment under the contract.

7.24.4.2 No provision of this Section 7.24, SUSPENSION OF WORK (§3-125-7 HAR) shall be construed as entitling the Contractor to compensation for delays due to failure of surety, for suspensions made at

the request of the Contractor, for any delay required under the Contract, for partial suspension of work or for suspensions made by the Project Manager under the provisions of Subsections 7.24.1.1, 7.24.1.2, 7.24.1.3 and 7.24.1.5.

7.25 DISPUTES AND CLAIMS (§3-126-31 HAR). Disputes shall be resolved in accordance with Section 103D-703, HRS, and chapter 126, Procurement Rules, as the same may be amended from time to time.

7.25.1 REQUIRED NOTIFICATION. As a condition precedent for any claim, the Contractor must give notice in writing to the Project Manager in the manner and within the time periods stated in Section 4.2, CHANGES for claims for extra compensation, damages, or an extension of time due for one or more of the following reasons:

7.25.1.1 Requirements not clearly covered in the Contract, or not ordered by the Project Manager as an extra;

7.25.1.2 Failure by the Department and Contractor to agree to an Oral Order or an adjustment in price or contract time for a Field Order or a Change Order (which was not previously agreed on by a Field Order), issued by the Department;

7.25.1.3 An action or omission by the Project Manager requiring performance changes beyond the scope of the Contract; and/or

7.25.1.4 Failure of the Department to issue a Field Order for controversies within the scope of Section 4.2, CHANGES.

7.25.1.5 For any other type of claim, the Contractor shall give notice within the time periods set forth in contract provisions pertaining to that event. If no specific contract provisions pertain to the claim, then the written notice of claim must be submitted within fifteen (15) days of the event giving rise to the claim.

7.25.2 CONTINUED PERFORMANCE OF WORK. The Contractor shall at all times continue with performance of the contract in full compliance with the directions of the Project Manager. Continued performance by the Contractor shall not be deemed a waiver of any claim for additional compensation, damages, or an extension of time for completion, provided that the written notice of claim is submitted in accordance with Subsection 7.25.1, REQUIRED NOTIFICATION.

7.25.3 The requirement for timely written notice shall be a condition precedent to the assertion of a claim.

7.25.4 REQUIREMENTS FOR NOTICE OF CLAIM. The notice of claim shall clearly state the Contractor's intention to make claim and the reasons why the Contractor believes that additional compensation, changes or an extension of time may be remedies to which it is entitled. At a minimum, it shall provide the following:

7.25.4.1 Date of the protested order, decision or action;

7.25.4.2 The nature and circumstances which caused the claim;

7.25.4.3 The contract provision(s) that support the claim;

7.25.4.4 The estimated dollar cost, if any, of the protested work and how that estimate was determined; and

7.25.4.5 An analysis of the progress schedule showing the schedule change or disruption if the Contractor is asserting a schedule change or disruption.

7.25.5 If the protest or claim is continuing, the information required in Subsection 7.25.4 REQUIREMENTS FOR NOTICE OF CLAIMS above shall be supplemented as requested by the Project Manager.

7.25.6 FINAL STATEMENT FOR CLAIM. The Contractor shall provide a final written statement of the actual adjustment in contract price and/or contract time requested for each notice of claim. Such statement shall clearly set forth that it is the final statement for that notice of claim. All such final statements shall be submitted within thirty (30) days after completion of the work that is the subject of the claim, but in no event no later than thirty (30) days after the Project Acceptance Date or the date of termination of the Contractor, whichever comes first.

7.25.7 All claims of any nature are barred if asserted after final payment under this Contract has been made.

7.25.8 Contractor may protest the assessment or determination by the Project Manager of amounts due the Department from the Contractor by providing a written notice to the Chairman within thirty (30) days of the date of the written assessment or determination. Said notice shall comply with all requirements of Subsections 7.25.4, REQUIREMENTS FOR NOTICE OF CLAIM and 7.25.6, FINAL STATEMENT FOR CLAIM above. The requirement of such notice cannot be waived and it is a condition precedent to any claim by the Contractor. Failure to comply with these notice provisions constitutes a waiver of any claim.

7.25.9 In addition to the requirements of Subsections 7.25.4, 7.25.6, and 7.25.8, all final written statements of claim shall be certified. This certification requirement applies to the Contractor without exception, including, but not limited to, situations involving claims of subcontractors or suppliers which meet the requirements of Subsection 5.13.4. The certification must be executed by a person duly authorized to bind the Contractor with respect to the claim. The certification shall state as follows:

> "I certify that the claim is made in good faith; that the supporting data are accurate and complete to the best of my knowledge and belief; that the amount requested accurately reflects the contract adjustment for which the Contractor believes the Department is liable; and that I am duly authorized to certify the claim on behalf of the Contractor."

7.25.10 DECISION ON CLAIM/APPEAL. The decision of the Chairman on the claim shall be final and conclusive, unless fraudulent, or unless the Contractor delivers to the Chairman a written appeal of the Chairman's decision. Said appeal shall be delivered to the Chairman no later than thirty (30) days after the date of the Chairman's decision.

7.25.10.1 In that event, the decision of the Chairman shall be final and conclusive, unless fraudulent or unless the Contractor brings an action seeking judicial review of the Chairman's decision in an appropriate circuit court of this State within six (6) months from the date of the Chairman's decision.

7.25.11 PAYMENT AND INTEREST. The amount determined payable pursuant to the decision, less any portion already paid, normally should be paid without awaiting Contractor action concerning appeal. Such payments shall be without prejudice to the rights of either party. Interest on amounts ultimately determined to be due to a Contractor shall be payable at the Statutory rate applicable to judgments against the State under Chapter 662, HRS from the date of receipt of a properly certified final written statement of actual adjustment required until the date of decision; except, however, that if an action is initiated in circuit court, interest under this Section 7.25, DISPUTES AND CLAIMS (§3-126-31 HAR) shall only be calculated until the time such action is initiated. Interest on amounts due the

Department from the Contractor shall be payable at the same rate from the date of issuance of the Project Manager's notice to the Contractor. Where such payments are required to be returned by a subsequent decision, interest on such payments shall be paid at the statutory rate from the date of payment.

7.25.12 Contractor shall comply with any decision of the Chairman and proceed diligently with performance of this contract pending final resolution by a circuit court of this State of any controversy arising under, or by virtue of, this Contract, except where there has been a material breach of contract by the Department; provided that in any event the Contractor shall proceed diligently with the performance of the Contract where the Project Manager has made a written determination that continuation of work under the Contract is essential to the public health and safety.

7.25.13 WAIVER OF ATTORNEY'S FEES. In the event of any litigation arising under, or by virtue of, this Contract, the Contractor and the Department agree to waive all claims against each other for attorney's fees and agree to refrain from seeking attorney's fees as part of any award or relief from any court.

7.26 FAILURE TO COMPLETE THE WORK ON TIME

7.26.1 Completion of the work within the required time is important because delay in the prosecution of the work will inconvenience the public and interfere with the Department's business. In addition, the Department will be damaged by the inability to obtain full use of the completed work and by increased engineering, inspection, superintendence, and administrative services in connection with the work. Furthermore, delay may detrimentally impact the financing, planning, or completion of other Department projects because of the need to devote Department resources to the project after the required completion date. The monetary amount of such public inconvenience, interference with Department business, and damages, is difficult, if not impossible, to accurately determine and precisely prove. Therefore, it is hereby agreed that the amount of such damages shall be the appropriate sum of liquidated damages.

7.26.1.1 When the Contractor fails to complete the work or any portion of the work within the time or times fixed in the contract or any extension thereof, it is agreed the Contractor shall pay liquidated damages to the Department in the amount of $1,000 (one thousand dollars) per calendar day, unless otherwise indicated in the Special Conditions.

7.26.1.2 If the Contractor fails to correct Punchlist deficiencies as required by Section 7.32, PROJECT ACCEPTANCE DATE, the Department will be inconvenienced and damaged, therefore, it is agreed that the Contractor shall pay liquidated damages to the Department based upon the amount stated inSection 7.26.1.1. Liquidated damages shall accrue for all days after the Contract Completion Date or any extension thereof, until the date the Punchlist items are corrected and accepted by the Project Manager.

7.26.1.3 If the Contractor fails to submit final documents as required by Section 7.33, FINAL SETTLEMENT OF CONTRACT, the Department will be inconvenienced and damaged, therefore, it is agreed that the Contractor shall pay liquidated damages to the Department in the amount stated in the Section 7.26.1.1. Liquidated damages shall accrue for all days after the Contract Completion Date or any extension thereof, until the date the final documents are received by the Project Manager.

7.26.1.4 The Project Manager shall assess the total amount of liquidated damages in accordance with the amount of $1,000 (one thousand dollars) per day, unless otherwise indicated in the Special Conditions, and provide written notice of such assessment to the Contractor.

7.26.2 ACCEPTANCE OF LIQUIDATED DAMAGES. The assessment of liquidated damages by the Project Manager shall be accepted by the parties hereto as final, unless the Contractor delivers a written appeal of the Project Manager's decision in accordance with Subsection 7.25.10, DECISION ON CLAIM/APPEAL REQUIREMENTS. Any allowance of time or remission of charges or liquidated damages shall in no other manner affect the rights or obligations of the parties under this contract nor be construed to prevent action under Section 7.27, TERMINATION OF CONTRACT FOR CAUSE. If the Department terminates the Contractor's right to proceed, the resulting damage will include such liquidated damages for such time as may be required for final completion of the work after the required contract completion date.

7.26.3 PAYMENTS FOR LIQUIDATED DAMAGES. Liquidated damages shall be deducted from monies due or that may become due to the Contractor under the contract or from other monies that may be due or become due to the Contractor from the Department.

7.26.4 If the Contractor contests the per diem liquidated charge, the Department may elect to recover the actual damages caused by the Contractor's delay. Should the Department claim liquidated damages for delay and if such liquidated damages are disallowed for any reason, the Department shall recover the actual damages to which it is legally entitled as a result of the Contractor's delay or other breach.

7.27 TERMINATION OF CONTRACT FOR CAUSE (§3-125-18 HAR)

7.27.1 DEFAULT. If the Contractor refuses or fails to perform the work, or any separable part thereof, with such diligence as will assure its completion within the time specified in this contract, or any extension thereof, fails to complete the work within such time, or commits any other material breach of this contract, and further fails within seven (7) days after receipt of written notice from the Project Manager to commence and continue correction of the refusal or failure with diligence and promptness, the Chairman may, by written notice to the Contractor, declare the Contractor in breach and terminate the Contractor's right to proceed with the work or the part of the work as to which there has been delay or other breach of contract. In such event, the Department may take over the work and perform the same to completion, by contract or otherwise, and may take possession of, and utilize in completing the work, the materials, appliances, and plant as may be on the site of the work and necessary therefor. Whether or not the Contractor's right to proceed with the work is terminated, the Contractor and the Contractor's sureties shall be liable for any damage to the Department resulting from the Contractor's refusal or failure to complete the work within the specified time.

7.27.2 ADDITIONAL RIGHTS AND REMEDIES. The rights and remedies of the Department provided in this contract are in addition to any other rights and remedies provided by law.

7.27.3 COSTS AND CHARGES

7.27.3.1 All costs and charges incurred by the Department, together with the cost of completing the work under contract, will be deducted from any monies due or which would or might have become due to the Contractor had it been allowed to complete the work under the contract. If such expense exceeds the sum which would have been payable under the contract, then the Contractor and the surety shall be liable and shall pay the Department the amount of the excess.

7.27.3.2 In case of termination, the Chairman shall limit any payment to the Contractor to the part of the contract satisfactorily completed at the time of termination. Payment will not be made until the work has satisfactorily been completed and the tax clearance required by Section 8.8, FINAL PAYMENT

is submitted by the Contractor. Termination shall not relieve the Contractor or Surety from liability for liquidated damages.

7.27.4 ERRONEOUS TERMINATION FOR CAUSE. If, after notice of termination of the Contractor's right to proceed under this Section 7.27, TERMINATION OF CONTRACT FOR CAUSE (§3-125-18 HAR) it is determined for any reason that good cause did not exist to allow the Department to terminate as provided herein, the rights and obligations of the parties shall be the same as, and the relief afforded the Contractor shall be limited to, the provisions contained in Section 7.28, TERMINATION FOR CONVENIENCE.

7.28 TERMINATION FOR CONVENIENCE (§3-125-22 HAR)

7.28.1 TERMINATION. The Chairman may, when the interests of the Department so require, terminate this contract in whole or in part, for the convenience of the Department. The Chairman shall give written notice of the termination to the Contractor specifying the part of the contract terminated and when termination becomes effective.

7.28.2 CONTRACTOR'S OBLIGATIONS. The Contractor shall incur no further obligations in connection with the terminated work and on the date set in the notice of termination the Contractor will stop work to the extent specified. The Contractor shall also terminate outstanding orders and subcontracts as they relate to the terminated work. The Contractor shall settle the liabilities and claims arising out of the termination of subcontracts and orders connected with the terminated work subject to the Department's approval. The Chairman may direct the Contractor to assign the Contractor's right, title, and interest under terminated orders or subcontracts to the Department. The Contractor must still complete the work not terminated by the notice of termination and may incur obligations as necessary to do so.

7.28.3 RIGHT TO CONSTRUCTION AND GOODS. The Chairman may require the Contractor to transfer title and delivery to the Department in the manner and to the extent directed by the Chairman, the following:

7.28.3.1 Any completed work; and

7.28.3.2 Any partially completed construction, goods, materials, parts, tools, dies, jigs, fixtures, drawings, information, and contract rights (hereinafter called "construction material") that the Contractor has specifically produced or specially acquired for the performance of the terminated part of this contract.

7.28.3.3 The Contractor shall protect and preserve all property in the possession of the Contractor in which the Department has an interest. If the Chairman does not elect to retain any such property, the Contractor shall use its best efforts to sell such property and construction material for the Department's account in accordance with the standards of Section 490:2-706, HRS.

7.28.4 COMPENSATION

7.28.4.1 Contractor shall submit a termination claim specifying the amounts due because of the termination for convenience together with cost or pricing data, submitted to the extent required by subchapter 15, chapter 3-122, HAR. If the Contractor fails to file a termination claim within one (1) year from the effective date of termination, the Chairman may pay the Contractor, if at all, an amount set in accordance with Subsection 7.28.4.3.

7.28.4.2 The Chairman and the Contractor may agree to a settlement provided the Contractor has filed a termination claim supported by cost or pricing data submitted as required and that the settlement does not exceed the total contract price plus settlement costs reduced by payments previously made by the Department, the proceeds of any sales of construction, supplies, and construction materials under Subsection 7.28.3.3 of this Section, and the contract price of the work not terminated.

7.28.4.3 Absent complete agreement, the Chairman shall pay the Contractor the following amounts, less any payments previously made under the Contract.

(a) The cost of all contract work performed prior to the effective date of the notice of termination work plus a five percent (5%) markup on the actual direct costs, including amounts paid to subcontractor(s), less amounts previously paid or to be paid for completed portions of such work; provided, however, that if it appears that the Contractor would have sustained a loss if the entire contract would have been completed, no markup shall be allowed or included and the amount of compensation shall be reduced to reflect the anticipated rate of loss. No anticipated profit or consequential damage will be due or paid.

(b) Subcontractors shall be paid a markup of ten percent (10%) on their direct job costs incurred to the date of termination. No anticipated profit or consequential damage will be due or paid to any subcontractor. These costs must not include payments made to the Contractor for subcontract work during the contract period.

(c) In any case, the total sum to be paid the Contractor shall not exceed the total contract price reduced by the amount of any sales of construction supplies, and construction materials.

7.28.4.4 Costs claimed, agreed to, or established by the Department shall be in accordance with chapter 3-123, HAR.

7.29 CORRECTING DEFECTS. If the Contractor fails to commence to correct any defects of any nature, within ten (10) working days after the correction thereof has been requested in writing by the Department, and thereafter to expeditiously complete the correction of said defects, the Project Manager may without further notice to the Contractor or surety and without termination of contract, correct the defects and deduct the cost thereof from the contract price.

7.30 FINAL CLEANING. Before final inspection of the work, the Contractor shall clean all ground occupied by the Contractor in connection with the work of all rubbish, excess materials, temporary structures and equipment, and all parts of the work must be left in a neat and presentable condition to the satisfaction of the Project Manager. However, the Contractor shall not remove any warning and directional signs prior to the formal acceptance by the Project Manager. Full compensation for final cleaning will be included in the prices paid for the various items of work or lump sum bid, as the case may be, and no separate payment will be made therefor.

7.31 SUBSTANTIAL COMPLETION AND FINAL INSPECTION. Before the Department accepts the project as being completed, unless otherwise stipulated by the Project Manager the following procedure shall be followed:

7.31.1 SUBSTANTIAL COMPLETION

7.31.1.1 The Contractor and its subcontractors shall inspect the project to confirm whether the Project is Substantially Complete. This inspection effort shall include the testing of all equipment and providing a Punchlist that identifies deficiencies which must be corrected. Contractor shall make the corrections and if required repeat the procedure. Also, the Contractor shall schedule final Building, Plumbing, Electrical, Elevator, Fire and other required inspections and obtain final approvals.

(a) When in compliance with the above requirements, the Contractor shall notify the Project Manager in writing that project is Substantially Complete and ready for a Final Inspection. Along with the Substantial Completion notification, the Contractor shall provide its Punchlist(s) with the status of the deficiencies and dates when the deficiencies were corrected. The Project Inspector and / or the Project Manager shall make a preliminary determination whether project is Substantially Complete.

(b) If the Project is not Substantially Complete, the Project Manager shall inform the Contractor. The Contractor shall identify deficiencies which must be corrected, update its Punchlist, make the necessary corrections and repeat the previous step. After completing the necessary work, the Contractor shall notify the Project Manager in writing that Punchlist deficiencies have been corrected and the project is ready for a Final Inspection.

(c) If the Project is Substantially Complete, the Project Manager shall schedule a Final Inspection within fifteen (15) days of the Contractor's notification letter or as otherwise determined by the Project Manager.

7.31.1.2 In addition, and to facilitate closing of the project, the Contractor shall also proceed to obtain the following closing documents (where applicable) prior to the Final Inspection:

(a) Field-Posted As-Built Drawings;
(b) Maintenance Service Contract and two (2) copies of a list of all equipment;
(c) Five (5) sets of operating and maintenance manuals;
(d) Air conditioning test and balance reports; and
(e) Any other final submittal required by the Contract.

7.31.2 FINAL INSPECTION. If at the Final Inspection the Project Manager determines that all work is completed, the Project Manager shall notify the Contractor in accordance with Section 7.32, PROJECT ACCEPTANCE DATE. Should there be remaining deficiencies which must be corrected the Contractor shall provide an updated Punchlist to the Project Manager, within five (5) days from the Final Inspection Date. The Contractor shall make the necessary corrections.

7.31.2.1 The Project Manager shall confirm the list of deficiencies noted by the Contractor's punchlist(s) and will notify the Contractor of any other deficiencies that must be corrected before final settlement.

7.31.3 The Project Manager may add to or otherwise modify the Punchlist from time to time. The Contractor shall take immediate action to correct the deficiencies.

7.31.4 REVOKING SUBSTANTIAL COMPLETION. At any time before final Project Acceptance is issued the Project Manager may revoke the determination of Substantial Completion if the Project Manager finds it was not warranted. The Project Manager shall notify the Contractor in writing with the reasons and outstanding deficiencies negating the declaration. Once notified, the Contractor shall make the necessary corrections and repeat the required steps noted in Subsections 7.31.1 and 7.31.2.

7.32 PROJECT ACCEPTANCE DATE

7.32.1 If upon Final Inspection, the Project Manager finds that the project has been satisfactorily completed in compliance with the contract, the Project Manager shall declare the project completed and accepted and will notify the Contractor in writing of the acceptance by way of the Project Acceptance Notice.

7.32.2 PROTECTION AND MAINTENANCE. After the Project Acceptance Date, the Contractor shall be relieved of maintaining and protecting the work except that this does not hold true for those portions of the work which have not been accepted, including Punchlist deficiencies. The Department shall be responsible for the protection and maintenance of the accepted facility.

7.32.3 The date of Project Acceptance shall determine:

7.32.3.1 End of Contract Time;

7.32.3.2 Commencement of all guaranty periods except as noted in Section 7.34, CONTRACTOR'S RESPONSIBILITY FOR WORK: RISK OF LOSS; and

7.32.3.3 Commencement of all maintenance services except as noted in Section 7.34, CONTRACTOR'S RESPONSIBILITY FOR WORK: RISK OF LOSS.

7.32.4 PUNCHLIST REQUIREMENTS. If a Punchlist is required under Section 7.31, SUBSTANTIAL COMPLETION AND FINAL INSPECTION, the Project Acceptance Notice will include the Project Manager's Punchlist and the date when correction of the deficiencies must be completed.

7.32.5 Upon receiving the Punchlist, the Contractor shall promptly devote the required time, labor, equipment, materials and incidentals necessary to correct the deficiencies expeditiously.

7.32.6 For those items of work that cannot be completed by the established date, the Contractor shall submit a schedule in writing to the Project Manager for approval along with documentation to justify the time required, no later than five (5) working days before the date stipulated for completion of the Punchlist work. A Proposed schedule submitted after the five (5) day period will not be considered.

7.32.7 FAILURE TO CORRECT DEFICIENCIES. After the Contract Completion Date, or any extension thereof, if the Contractor fails to correct the deficiencies within the established date or agreed to Punchlist completion date, the Project Manager shall assess liquidated damages as required by Section 7.26, FAILURE TO COMPLETE THE WORK ON TIME.

7.32.8 If the Contractor fails to correct the deficiencies and complete the work by the established or agreed to date, the Department also reserves the right to correct the deficiencies by whatever method it deems necessary and deduct the cost from the final payment due the Contractor.

7.32.9 The Contractor may further be prohibited from bidding in accordance with Section 2.12, DISQUALIFICATION OF BIDDERS. In addition, assessment of damages shall not prevent action under Section 7.27, TERMINATION OF CONTRACT FOR CAUSE.

7.33 FINAL SETTLEMENT OF CONTRACT

7.33.1 The contract will be considered settled after the project acceptance date and when the following items have been satisfactorily submitted, where applicable:

7.33.1.1 Necessary Submissions in addition to the items noted under Subsection 7.31.1.2.

7.33.1.2 All written guarantees required by the contract.

7.33.1.3 Complete and certified weekly payrolls for the Contractor and its Subcontractor(s).

7.33.1.4 Certificate of Plumbing and Electrical Inspection.

7.33.1.5 Certificate of Building Occupancy.

7.33.1.6 Certificate for Soil Treatment and Wood Treatment.

7.33.1.7 Certificate of Water System Chlorination.

7.33.1.8 Certificate of Elevator Inspection, Boiler and Pressure Pipe installation.

7.33.1.9 Certification of compliance with §103B-3 HRS, Employment of State Residents.

7.33.1.10 All other documents required by the Contract.

7.33.2 FAILURE TO SUBMIT CLOSING DOCUMENTS. The Contractor shall submit the final Payment Application and the above applicable closing documents within sixty (60) days from the date of Project Acceptance or the agreed to Punchlist completion date. Should the Contractor fail to comply with these requirements, the Chairman may terminate the Contract for cause. The pertinent provisions of Section 7.27, TERMINATION OF CONTRACT FOR CAUSE shall be applicable.

7.33.3 In addition, should the Contractor fail to furnish final closing documents within the required time period, the Project Manager shall assess liquidated damages as required by Section 7.26, FAILURE TO COMPLETE THE WORK ON TIME.

7.34 CONTRACTOR'S RESPONSIBILITY FOR WORK; RISK OF LOSS

7.34.1 Until the establishment of the Project Acceptance Date or Beneficial Occupancy, whichever is sooner, the Contractor shall take every necessary precaution against injury or damage to any part of the work caused by the perils insured by an All Risk policy, whether arising from the execution or from the non-execution of the work. The Contractor shall rebuild, repair, restore and make good all injuries or damage to any portion of the work occasioned by the perils insured by an All Risk policy before the date of final acceptance and shall bear the risk and expense thereof.

7.34.2 After the Project Acceptance Date or Beneficial Occupancy, whichever is sooner, the Contractor shall be relieved of maintaining and protecting the work except for those portions of the work which have not been accepted including Punchlist deficiencies.

7.34.3 The risk of damage to the work from any hazard or occurrence that may be covered by a required Property Insurance policy is that of the Contractor, unless such risk of loss is placed elsewhere by express language in the Contract Documents. No claims for any loss or damage shall be recognized by the Department, nor will any such loss or damage excuse the complete and satisfactory performance of the Contract by the Contractor.

7.35 GUARANTEE OF WORK

7.35.1 In addition to any required manufacturers warranties, all work and equipment shall be guaranteed by the Contractor against defects in materials, equipment or workmanship for one year from the Project Acceptance Date or as otherwise specified in the Contract Documents.

7.35.2 REPAIR OF WORK. If, within any guarantee period, repairs or changes are required in connection with the guaranteed work, which in the opinion of the Project Manager is necessary due to materials, equipment or workmanship which are inferior, defective or not in accordance with the terms of the Contract, the Contractor shall within five (5) working days and without expense to the Department commence to:

7.35.2.1 Place in satisfactory condition in every instance all such guaranteed work and correct all defects therein; and

7.35.2.2 Make good and repair or replace to new or pre-existing condition all damages to the building, facility, work or equipment or contents thereof, resulting from such defective materials, equipment or installation thereof.

7.35.3 MANUFACTURER'S AND INSTALLER'S GUARANTEE. Whenever a manufacturer's or installer's guarantee on any product specified in the respective Specification sections, exceeds one year, this guarantee shall become part of this contract in addition to the Contractor's guarantee. Contractor shall complete the guarantee forms in the name of the Department and submit such forms to the manufacturer within such time required to validate the guarantee. Contractor shall submit to the Department a photocopy of the completed guarantee form for the Department's record as evidence that such guarantee form was executed by the manufacturer.

7.35.4 If a defect is discovered during a guarantee period, all repairs and corrections to the defective items when corrected shall again be guaranteed for the original full guarantee period. The guarantee period shall be tolled and suspended for all work affected by the defect. The guarantee period for work affected by the defect shall restart for its remaining duration upon confirmation by the Project Manager that the deficiencies have been repaired or remedied.

7.36 WORK OF AND CHARGES BY UTILITIES

7.36.1 The Contractor shall be responsible for scheduling and coordinating the work with the utility companies and applicable governmental agencies for permanent service installation and connections or modifications to existing utilities. The Contractor shall make available all portions of the work necessary for the utility companies to do their work. The Department shall not bear the risk of any damage to the contract work caused by any utility company, and work of repairing such damage and delay costs must be resolved between the Contractor, the utility company, and their insurers.

7.36.2 Unless stated as an allowance item to be paid by the Contractor, the Department will pay the utility companies and applicable governmental agencies directly for necessary modifications and connections. Contractor charges for overhead, supervision, coordination, profit, insurance and any other incidental expenses shall be included in the Contractor's Bid whether the utility is paid directly by the Department or by an allowance item in the Contract.

7.37 RIGHT TO AUDIT RECORDS

7.37.1 The STATE may, at reasonable times and places, audit the books and records of the CONTRACTOR, prospective contractor, subcontractor or prospective subcontractor which are related to the cost or pricing data, and a State contract, including subcontracts, other than a firm fixed-price contract. The Contractor and subcontractor(s) shall maintain the books and records for a period of four (4) years from the date of final payment under the Contract.

7.37.2 The Contractor shall ensure that its subcontractors comply with this requirement and shall bear all costs (including attorney's fees) of enforcement in the event of its subcontractor's failure or refusal to fully cooperate.

7.37.3 Additionally, Sections 231-7, 235-108, 237-39 and other HRS chapters through reference, authorize the Department of Taxation to audit all taxpayers conducting business within the State. Contractors

must make available to the Department of Taxation all books and records necessary to verify compliance with the tax laws.

7.38 RECORDS MAINTENANCE, RETENTION AND ACCESS

7.38.1 The Contractor and any subcontractor whose contract for services is valued at $25,000 (twenty five thousand) or more shall, in accordance with generally acceptable accounting practices, maintain fiscal records and supporting documents and related files, papers, and reports that adequately reflect all direct and indirect expenditures and management and fiscal practices related to the Contractor and subcontractor's performance of services under this Contract.

7.38.2 The representative of the Department, the Chairman, the Attorney General, (the Federal granting agency, the Comptroller General of the United States, and any of their authorized representatives when federal funds are utilized), and the Legislative Auditor of the State of Hawaii shall have the right of access to any book, document, paper, file, or other record of the Contractor and any subcontractor that is related to the performance of services under this Contract in order to conduct an audit or other examination and /or to make copies, excerpts and transcripts for the purposes of monitoring and evaluating the Contractor and subcontractor's performance of services and the Contractor and subcontractor's program, management, and fiscal practices to assure the proper and effective expenditure of funds and to verify all costs associated with any claims made under this Contract.

7.38.3 The right of access shall not be limited to the required retention period but shall last as long as the records are retained. The Contractor and subcontractor shall maintain and retain all books and records related to the Contractor and subcontractor's performance of services under this Contract, including any cost or pricing data for three (3) years from the date of final payment, except that if any litigation, claim, negotiation, investigation, audit or other action involving the books and records has been started before the expiration of the three (3) year period, the Contractor and subcontractors shall retain the books and records until completion of the action and resolution of all issues that arise from it, or until the end of the three (3) year retention period, whichever occurs later. Furthermore, it shall be the Contractor's responsibility to enforce compliance with this provision by any subcontractor.

7.39 COST OR PRICING DATA. Cost or pricing data must be submitted to the Agency purchasing officer and timely certified as accurate for contracts over $100,000 unless the contract is for a multiple-term or as otherwise specified by the procurement officer. Unless otherwise required by the Agency procurement officer, cost or pricing data submission is not required for Contracts awarded pursuant to competitive sealed bid procedures. If certified cost or pricing data are subsequently found to have been inaccurate, incomplete, or noncurrent as of the date stated in the certificate, the STATE is entitled to an adjustment of the contract price, including profit or fee, to exclude any significant sum by which the price, including profit or fee, was increased because of the defective data. It is presumed that overstated cost or pricing data increased the contract price in the amount of the defect plus related overhead and profit or fee. Therefore, unless there is a clear indication that the defective data was not used or relied upon, the price will be reduced in such amount.

7.39.1 AUDIT OF COST OR PRICING DATA. When cost or pricing principles are applicable, the STATE may require an audit of cost or pricing data.

7.40 CONFIDENTIALITY OF MATERIAL

7.40.1 All material given to or made available to the CONTRACTOR by virtue of this Contract, which is identified as proprietary or confidential information, will be safeguarded by the CONTRACTOR and

shall not be disclosed to any individual or organization without the prior written approval of the STATE.

7.40.2 All information, data, or other material provided by the CONTRACTOR to the STATE shall be subject to the Uniform Information Practices Act, chapter 92F, HRS.

7.41 PUBLICITY. The CONTRACTOR shall not refer to the STATE, or any office, agency, or officer thereof, or any State employee, including the head of the purchasing agency, the Chief Procurement Officer, the Director, the Agency procurement officer, or to the services or goods, or both, provided under this Contract, in any of the CONTRACTOR's brochures, advertisements, or other publicity of the CONTRACTOR. All media contacts with the CONTRACTOR about the subject matter of this Contract shall be referred to the Agency procurement officer.

7.42 OWNERSHIP RIGHTS AND COPYRIGHT. The STATE shall have complete ownership of all material, both finished and unfinished which is developed, prepared, assembled, or conceived by the CONTRACTOR pursuant to this Contract, and all such material shall be considered "works made for hire." All such material shall be delivered to the STATE upon expiration or termination of this Contract. The STATE, in its sole discretion, shall have the exclusive right to copyright any product, concept, or material developed, prepared, assembled, or conceived by the CONTRACTOR pursuant to this Contract.

7.43 GOVERNING LAW. The validity of this Contract and any of its terms or provisions, as well as the rights and duties of the parties to this Contract, shall be governed by the laws of the State of Hawaii. Any action at law or in equity to enforce or interpret the provisions of this Contract shall be brought in a state court of competent jurisdiction in Honolulu, Hawaii.

7.44 SEVERABILITY. In the event that a court declares any provision of this Contract invalid or unenforceable, such invalidity or unenforceability shall not affect the validity or enforceability of the remaining terms of this Contract.

7.45 WAIVER. The failure of the STATE to insist upon the strict compliance with any term, provision, or condition of this Contract, shall not constitute or be deemed to constitute a waiver or relinquishment of the STATE's right to enforce the same in accordance with this Contract. The fact that the STATE specifically refers to one provision of the Procurement Rules or one section of the Hawaii Revised Statutes, and does not include other provisions or statutory sections in this Contract shall not constitute a waiver or relinquishment of the STATE's rights or the CONTRACTOR's obligations under the Procurement Rules or statutes.

7.46 UTILITIES AND SERVICES

7.46.1 Where its operations are next to or near properties of utility companies or other property, the CONTRACTOR shall not start work until the CONTRACTOR makes arrangements necessary for the protection of said property.

7.46.2 The CONTRACTOR shall cooperate, coordinate and schedule its work to suit the owners of underground or overhead utility lines or other property in removing or altering such lines or providing new services in order for the work to progress according to the contract. Cooperation includes rearranging the CONTRACTOR's operations and normal work schedules and realignment of work as approved by the Department in order to accommodate the operations and work of the utilities and/or other property in and around the work site at no additional cost to the Department.

7.46.3 The CONTRACTOR shall contact all the various utility companies before the start of the work to ascertain any existing utilities and to develop a full understanding of the utility requirements with respect to this project. The CONTRACTOR shall furnish the Project Manager with evidence that the CONTRACTOR has contacted the utility companies.

7.46.4 If the CONTRACTOR discovers that the existence and location of utilities in the contract plans are not correct, the CONTRACTOR shall not disturb the utilities and immediately notify the Project Manager. The Project Manager will advise the CONTRACTOR regarding actions to take.

7.46.5 The CONTRACTOR shall ascertain the exact location and depth of utilities within the project area. The CONTRACTOR shall mark such locations to warn workers or equipment operators of their existence and location. The CONTRACTOR shall be responsible to acquaint personnel working near utilities with the type, size, location and depth of the utilities and the consequences that might result from disturbances. The CONTRACTOR shall not start trenching or start similar operations until the CONTRACTOR has taken reasonable and appropriate precautions to protect the utilities.

7.46.6 Any utilities or other property that the CONTRACTOR encounters during the progress of the work, such as telephone ducts, electric ducts, water lines, sewer lines, electric lines and drainage pipes, whether shown or not on the contract plans, shall not be disturbed or damaged unless otherwise instructed in the plans and specifications.

7.46.7 In the event the utilities or other property are damaged or disturbed by the CONTRACTOR, the CONTRACTOR shall be liable for all such damage where the utilities or other property are:

(a) Shown on the plan in its actual or approximate location; or
(b) Exposed on the job as it progresses; or
(c) Pointed out to the CONTRACTOR in the field.

7.46.8 Such utilities or other property as described above shall be "known utilities or other property." If the CONTRACTOR encounters an unknown utility or other property, it shall not proceed until it has notified the Project Manager and receives instructions. If the Project Manager directs additional work, it shall be paid for under Section 4.2, CHANGES.

7.46.9 The CONTRACTOR shall repair and restore to pre-damaged condition any utilities or any other property it may damage, and it shall be liable for any and all resulting damage at no cost to the Department, the work or utility owner or property owner. Any damage claim due to the disruption of service caused by the utilities being damaged shall be paid by the CONTRACTOR who shall defend, indemnify and hold harmless the Department from all suits, actions or claims of any character brought on account of such damages, whether or not the Department may have been partially at fault. Public liability and property damage insurance to be obtained by the CONTRACTOR pursuant to Section 7.3 INSURANCE REQUIREMENTS shall cover such risk of damage.

7.46.10 In the event the CONTRACTOR simultaneously with the discovery of an unknown utility or other property damages that utility or other property, the CONTRACTOR shall not be held liable beyond the extent of the CONTRACTOR's liability insurance but shall immediately notify the Project Manager. Upon instruction from the Project Manager, the CONTRACTOR shall repair all damages and execute a plan for dealing with the damaged utility or other property. This repair work shall be considered additional work as covered in Section 4.2, CHANGES.

~END OF ARTICLE 7~

ARTICLE 8: MEASUREMENT AND PAYMENT

8.1 MEASUREMENT OF QUANTITIES

8.1.1 All work completed under the Contract shall be measured by the Project Manager according to United States standard measures, or as stated in this Contract. The method of measurement and computations to be used in determination of quantities of material furnished and of work performed under the contract shall conform to good Managing practice. These measurements shall be considered correct and final unless the Contractor has protested same to the Project Manager and has demonstrated the existence of an error by actual physical measurement before the work has progressed in a manner, which would prohibit a proper check.

8.1.2 All measurements of the area of the various surfaces, pavement and base courses will be made in the horizontal projection of the actual surface and no deductions will be made for fixtures or structures having an area of nine (9) square feet or less. All measurements of headers, curbs, fences and any other type of construction which is to be paid for by its length will be made in the horizontal projection of the actual driven length from toe to top of cutoff, and for piles, which will be by actual length. All materials which are specified for measurement by the cubic yard "Loose Measurement" or "Measured in the Vehicle" shall be hauled in approved vehicles and measured therein at the point of delivery. Approved vehicles for this purpose may be of any type or size satisfactory to the Project Manager, provided that the body is of such type that the actual contents may be readily and accurately determined. Unless all approved vehicles on a job are of a uniform capacity each approved vehicle must bear a plainly legible identification mark indicating the specific approved capacity. The Inspector may reject all loads not hauled in such approved vehicles.

8.2 NO WAIVER OF LEGAL RIGHTS. The Project Manager shall not be precluded or estopped by any measurements, estimate or certificate made either before or after the completion and acceptance of the work and payment therefor, from showing the true amount and character of the work performed and materials furnished by the Contractor, or from showing that any such measurement estimate or certificate is untrue or incorrectly made, or rejecting the work or materials that do not conform in fact to the contract. The Project Manager shall not be precluded or estopped, notwithstanding any such measurement, estimate, or certificate and payment in accordance therewith, from recovering from the Contractor and its sureties such damages as the Department may sustain by reason of the Contractor's failure to comply with the terms of the Contract. Neither the acceptance by the Project Manager or any representative of the Project Manager, nor any payment for or acceptance of the whole or any part of the work, nor any extension of time, or any possession taken by the Project Manager, shall operate as a waiver of any portion of the contract, or of any power herein reserved, or any right to damage herein provided. A waiver of any notice requirement or breach of the contract shall not be held to be a waiver of any other notice requirement or subsequent breach.

8.3 PAYMENT FOR ADDITIONAL WORK

8.3.1 Additional work as defined in Section 4.2, CHANGES, when ordered, shall be paid for as defined in Section 4.4, PRICE ADJUSTMENT by a duly issued change order in accordance with the terms provided therein.

8.3.2 On credit proposals and proposals covering both increases and decreases, the application of overhead and profit shall be on the net change in direct costs for the performance of the work.

8.3.3 When payment is to be made for additional work directed by a Field Order, the total price adjustment as specified in the Field Order or if not specified therein for the work contained in the related change

order shall be considered full compensation for all materials, labor, insurance, taxes, equipment use or rental and overheads, both field and home office including extended home and branch office overhead and other related delay impact costs.

8.3.4 FORCE ACCOUNT METHOD. When, for the convenience of the Department, payment is to be made by the Force Account method, all work performed or labor and materials and equipment furnished shall be paid for as described below. Payment by the Force Account method will not alter any rights, duties and obligations under the contract.

8.3.4.1 LABOR. For all hourly workers, the Contractor will receive the rate of wage including fringe benefits when such amounts are required by collective bargaining agreement or other employment contract generally applicable to the classes of labor employed on the work, which shall be agreed upon in writing before beginning work for each and every hour that said labor is actually engaged in said work.

(a) All markups for overhead and profit shall be added subject to limitations established in Section 4.5, ALLOWANCES FOR OVERHEAD AND PROFIT.

(b) No allowance for overtime compensation will be given without the written approval of the Project Manager prior to performance of such work.

8.3.4.2 INSURANCE AND TAXES. The Contractor and subcontractor(s) will also receive the actual additional costs paid for property damage, liability, worker's compensation insurance premiums, State unemployment contributions, Federal unemployment taxes, social security and Medicare taxes.

8.3.4.3 MATERIALS. For materials accepted by the Project Manager and used, the Contractor and subcontractor(s) shall receive the actual cost of such materials delivered and incorporated into work, plus a markup allowed under Section 4.5, ALLOWANCES FOR OVERHEAD AND PROFIT.

8.3.4.4 SUBCONTRACTORS. Subcontractor costs shall be the actual costs of the subcontractor marked up as defined in this Section 8.3, PAYMENT FOR ADDITIONAL WORK plus a markup allowed under Section 4.5, ALLOWANCES FOR OVERHEAD AND PROFIT.

8.3.4.5 EQUIPMENT

(a) For machinery or special equipment (other than small tools as herein defined in Subsection 8.3.4.5.(h) owned or leased by the Contractor or a related entity, the use of which has been authorized by the Project Manager:

(1) The Contractor will be paid at the per-hour rental rates based on the monthly rate established for said machinery or equipment in the then-current edition of the Rental Rate Blue Book for Construction Equipment including the estimated operating cost per hour and regional correction provided therein.

(2) If no rate is listed for a particular kind, type or size of machinery or equipment, then the monthly, hourly rates shall be as agreed upon in writing by the Contractor and the Project Manager prior to the use of said machinery or equipment. If there is no agreement, the Project Manager will set a rate. The Contractor may contest the rate pursuant to Section 7.25, DISPUTES AND CLAIMS.

(3) Rental rates which are higher than those specified in the aforesaid Rental Rate Blue Book publication may be allowed where such higher rates can be justified by job conditions such as work in water and work on lava, etc. Request for such higher rates shall be submitted in writing to the Project Manager for approval prior to the use of the machinery or equipment in question.

(b) For machinery or special equipment [other than small tools as herein defined in clause 8.3.4.5 (h)] rented by the Contractor or a related entity specifically for the Force Account work, the use of which has been authorized by the Project Manager, the Contractor will be paid the actual rental cost for the machinery or equipment, including mobilization and demobilization costs. A receipt from the equipment supplier shall be submitted to the Project Manager.

(c) For machinery or special equipment [other than small tools as herein defined in clause 8.3.4.5 (h)] rented by the Contractor or a related entity for use in the project, but which will also be used for the Force Account work, the use of which has been authorized by the Project Manager, the Contractor will be paid the actual rental cost for the machinery or equipment. No additional mobilization and demobilization costs will be paid. A receipt from the equipment supplier shall be submitted to the Project Manager.

(d) The rental rate for trucks not owned by the Contractor shall be those as established under the Hawaii State Public Utilities Commission, which will be paid for as an equipment item pursuant to Subsection 8.3.4.5, EQUIPMENT. Rental rates for Contractor owned trucks not listed in the Rental Rate Blue Book shall be agreed upon in writing by the Contractor and Project Manager prior to the use of said trucks. If there is no agreement, the Project Manager shall set the rate. The Contractor may contest the rate pursuant to Section 7.25, DISPUTES AND CLAIMS.

(e) The rental period shall begin at the time equipment reaches the site of work, shall include each day that the machinery or equipment is at the site of the work and shall terminate at the end of the day on which the equipment is no longer needed. In the event the equipment must standby due to work being delayed or halted by reason of design, traffic, or other related problems uncontrollable by the Contractor, excluding Saturdays, Sundays and Legal Holidays, unless the equipment is used to perform work on such days, the rental shall be two (2) hours per day until the equipment is no longer needed.

(1) The rental time to be paid will be for the time actually used. The Project Manager prior to the performance of such work must approve any hours or operation in excess of eight (8) hours in any one (1) day.
(2) Rental time will not be allowed or credited for any day on which machinery or equipment is inoperative due to its breakdown. On such days, the Contractor will be paid only for the actual hours, if any, that the machinery or equipment was in operation.
(3) In the event the Force Account work is completed in less than eight (8) hours, equipment rental shall nevertheless be paid for a minimum eight (8) hours.
(4) For the purpose of determining the rental period the continuous and consecutive days shall be the normal eight (8) hour shift work day, Monday through Friday excluding legal holidays. Any work day to be paid less than eight (8) hours shall not be considered as continuous, except for equipment removed from rental for fuel and lubrication.
(5) No additional premium beyond the normal rates used will be paid for equipment over eight (8) hours per day or forty (40) hours per week.

(f) All rental rates for machinery and equipment shall include the cost of fuel, oil, lubricants, supplies, small tools, necessary attachments, repairs, maintenance, tire wear, depreciation, storage, and all other incidentals.

(g) All machinery and equipment shall be in good working condition and suitable for the purpose for which the machinery and equipment is to be used.

(h) Individual pieces of equipment or tools having a replacement value of $2,000 (two thousand dollars) or less, whether or not consumed by use, shall be considered to be small tools and included in the allowed markup for overhead and profit and no separate payment will be made therefor.

(i) The total of all Force Account rental charges accrued over the duration of the contract for a specific item of equipment shall not exceed the replacement cost of that equipment.

(1) The Contractor shall provide the cost of replacement to the Project Manager prior to using the equipment. If the Project Manager does not agree with the replacement cost, the Project Manager shall set the replacement cost. The Contractor may contest the replacement cost pursuant to Section 7.25, DISPUTES AND CLAIMS.

(j) Should the item of equipment be rented from an unrelated entity, the rental cost will be treated as equipment cost under Subsection 8.3.4.5, EQUIPMENT.

(k) Transportation and/or Mobilization: The following provisions shall govern in determining the compensation to be paid to the Contractor for use of equipment or machinery on the Force Account method:

(1) The Project Manager shall approve the location from which the equipment is to be moved or transported.

(2) Where the equipment must be transported to the site of the Force Account work, the Department will pay the reasonable cost of mobilizing and transporting the equipment, including its loading and unloading, from its original location to the site of Force Account work. Upon completion of the work the Department will pay the reasonable cost of mobilizing and transporting the equipment back to its original location or to another location, whichever cost is less.

(3) The cost of transporting the equipment shall not exceed the rates established by the Hawaii State Public Utilities Commission. If such rates are nonexistent, then the rates will be determined by the Project Manager based upon the prevailing rates charged by established haulers within the locale.

(4) Where the equipment is self-propelled, the Department will pay the cost of moving the equipment by its own power from its original location to the site of the Force Account work. Upon completion of the work the Department will pay the reasonable cost of moving of the Equipment back to its original or another location, whichever cost is less.

(5) At the discretion of the Project Manager, when the Contractor desires to use such equipment for other than Force Account work, the costs of mobilization and transportation shall be prorated between the Force Account and non- Force Account work.

(l) Pickup trucks, vans, storage trailers, unless specifically rented for the Force Account work, shall be considered incidental to the Force Account work and the costs therefor are included in the markup allowed under Section 4.5, ALLOWANCES FOR OVERHEAD AND PROFIT.

8.3.4.6 STATE EXCISE (GROSS INCOME) TAX AND BOND. A sum equal to the current percentage rate for the State excise (Gross Income) tax on the total sum determined in Subsections 8.3.4.1, 8.3.4.2, 8.3.4.3 and 8.3.4.4 above, and the bond premium shall be added as compensation to the Contractor. The actual bond premium not to exceed one percent (1%) shall be added to items covered by Subsections 8.3.4.1, 8.3.4.2, 8.3.4.3 and 8.3.4.4 when applicable.

(a) The compensation as determined in Subsections 8.3.4.1, 8.3.4.2, 8.3.4.3, 8.3.4.4 and 8.3.4.5 above shall be deemed to be payment in full for work paid on a Force Account basis.

8.3.4.7 RECORDS. The Contractor and the Project Manager shall compare records of the labor, materials and equipment rentals paid by the Force Account basis at the end of each day. These daily records, if signed by both parties, shall thereafter be the basis for the quantities to be paid for by the Force Account method. The Contractor shall not be entitled to payment for Force Account records not signed by the Project Manager.

8.3.4.8 STATEMENTS. No payment will be made for work on a Force Account basis until the Contractor has submitted to the Project Manager, duplicate itemized statements of the cost of such Force Account work detailed as follows:

(a) Laborers. Name, classification, date, daily hours, total hours, rate, and extension for each laborer and foreman and also the amount of fringe benefits payable if any.

(b) Equipment. Designation, dates, daily hours, total hours, rental rate, and extension for each unit of machinery and equipment.

(c) Materials:

(1) Quantities of materials, prices and extensions.

(2) Costs of transporting materials, if such cost is not reflected in the prices of the materials.

(3) Statements shall be accompanied and supported by receipted invoices for all materials used and transportation charges. However, if materials used on the Force Account work are not specifically purchased for such work but are taken from the Contractor's stock, then in lieu of the invoices the Contractors shall submit an affidavit certifying that such materials were taken from stock and that the amount claimed represents the actual cost to the Contractor.

(d) Insurance. Cost of property damage, liability and worker's compensation insurance premiums, unemployment insurance contributions, and social security tax.

8.4 PROGRESS AND/OR PARTIAL PAYMENTS

8.4.1 PROGRESS PAYMENTS. The Contractor will be allowed progress payments on a monthly basis upon preparing the Monthly Payment Application forms and submitting the originals to the Project Manager. The monthly payment shall be based on the items of work satisfactorily completed and the value thereof at unit prices and/or lump sum prices set forth in the contract as determined by the Project Manager and will be subject to compliance with Section 7.9, PAYROLLS AND PAYROLL RECORDS.

8.4.1.1 ORIGINAL INVOICES REQUIRED. All payments under this Contract shall be made only upon submission by the CONTRACTOR of original invoices specifying the amount due and certifying that services requested under the Contract have been performed by the CONTRACTOR according to the Contract.

8.4.1.2 SUBJECT TO AVAILABLE FUNDS. Such payments are subject to availability of funds and allotment by the Director of Finance in accordance with chapter 37, HRS. Further, all payments shall be made in accordance with and subject to chapter 40, HRS.

8.4.2 In the event the Contractor or any Subcontractor fails to submit certified copies of payrolls in accordance with the requirements of Section 7.9, PAYROLLS AND PAYROLL RECORDS, the Project Manager may retain the amount due for items of work for which payroll affidavits have not been submitted on a timely basis notwithstanding satisfactory completion of the work until such records have been duly submitted. The Contractor shall not be due any interest payment for any amount thus withheld.

8.4.3 PARTIAL PAYMENT FOR MATERIALS. The Contractor will also be allowed partial payments to the extent of ninety percent (90%) of the manufacturer's, supplier's, distributor's or fabricator's invoice cost of accepted materials to be incorporated in the work on the following conditions:

8.4.3.1 The materials are delivered and properly stored at the site of the work; or

8.4.3.2 For special items of materials accepted by the Project Manager, the materials are delivered to the Contractor or subcontractor(s) and properly stored in an acceptable location within a reasonable distance to the site of the work.

8.4.4 Partial payments shall be made only if the Project Manager finds that:

8.4.4.1 The Contractor has submitted bills of sale for the materials or otherwise demonstrates clear title to such materials.

8.4.4.2 The materials are insured for their full replacement value to the benefit of the Department against theft, fire, damages incurred in transportation to the site, and other hazards.

8.4.4.3 The materials are not subject to deterioration.

8.4.4.4 In case of materials stored off the project site, the materials are not commingled with other materials not to be incorporated into the project.

8.4.5 FEDERAL FUNDS. If this Contract is payable in whole or in part from federal funds, Contractor agrees that, as to the portion of the compensation under this Contract to be payable from federal funds, the Contractor shall be paid only from such funds received from the federal government, and shall not be paid from any other funds.

8.4.6 Final Payment Requirements (§3-122-112, HAR). Upon receipt of the Contractor's invoice for final payment, the Department shall verify compliance with Section 103D-328 HRS via Hawaii Compliance Express (HCE).

8.5 PROMPT PAYMENT (§3-125-23 HAR)

8.5.1 Any money, other than retainage, paid to the CONTRACTOR shall be dispersed to subcontractors within ten days after receipt of the money in accordance with the terms of the subcontract; provided that the subcontractor has met all the terms and conditions of the subcontract and there are no bona fide disputes; and

8.5.2 BONA FIDE DISPUTES. The existence of a bona fide dispute with a subcontractor or material supplier shall not release the Contractor of its prompt payment obligations as to all sums due that are not directly affected by such dispute.

8.5.3 FILING NON-PAYMENT COMPLAINT. Subcontractors and material suppliers may file in writing a complaint with the Chairman regarding non-payment by the Contractor. Such complaint shall include:

8.5.3.1 The amount past due for work performed and already paid for by the Department;

8.5.3.2 That all the terms, conditions or requirements of its subcontract have been met; and

8.5.3.3 That no bona fide dispute over its performance exists. The Department will investigate the validity of the complaint.

8.5.4 The Department may withhold from future progress payments amounts to cover any sums paid to the Contractor for work performed by a subcontractor if the Department finds that the subcontractor complaint regarding non-payment by the Contractor has merit.

8.5.5 If the Project Manager determines that the Contractor failed to make prompt payment required to a subcontractor or material supplier with whom it has no bona fide dispute, the Project Manager shall inform the Contractor of the findings and request the Contractor make payment accordingly. If the Contractor does not act promptly, the Project Manager shall take appropriate action as allowed under this Contract and/or refer the matter to the Contractor Licensing Board for appropriate action under Section 444-17, Hawaii Revised Statutes regarding the Revocation, Suspension and Renewal of (Contractor) Licenses and/or initiate a petition for debarment of the Contractor from bidding on other Department jobs.

8.6 RETAINAGE

8.6.1 The Department will retain five percent (5%) of the total amount of progress and / or partial payments until after completion of the entire Contract in an acceptable manner at which time this balance, less any previous payments, will be certified and paid to the Contractor. After fifty percent (50%) of the work is completed and progress is satisfactory, no additional sum will be withheld. If progress is not satisfactory, the Department may continue to withhold retainage sums not exceeding five percent (5%) of the amount due the Contractor.

8.6.1.1 Contractor may withhold from amounts due its subcontractors, only the same percentage of retainage as that of the Contractor, and only if its subcontractors have provided valid performance and payments bonds or other bond or collateral acceptable to the Contractor.

8.6.1.2 Contractor or Subcontractor may negotiate with, and retain from its respective subcontractors, a different retainage percentage which cannot exceed ten percent (10%).

8.6.2 The retainage shall not include sums deducted as liquidated damages from monies due or that may become due the Contractor under the Contract.

8.7 WARRANTY OF CLEAR TITLE. The Contractor warrants and guarantees that all work and materials covered by progress or partial payments made thereon shall be free and clear of all liens, claims, security interests or encumbrances, and shall become the sole property of the Department. This provision shall not, however, be construed as an acceptance of the work nor shall it be construed as relieving the Contractor from the sole responsibility for all materials and work upon which payments have been made or the restoration of any damaged work, or as waiving the right of the Department to require the fulfillment of all the items of the Contract.

8.7.1 LIENS AND WARRANTIES. Goods provided under this Contract shall be provided free of all liens and provided together with all applicable warranties, or with the warranties described in the Contract documents, whichever are greater.

8.8 FINAL PAYMENT

8.8.1 Upon final payment to the CONTRACTOR, full payment to the subcontractor, including retainage, shall be made within ten days after receipt of the money; provided that there are no bona fine disputes over the subcontractor's performance under the subcontract.

8.8.2 Sums necessary to meet any claims of any kind by the Department may be retained from the sums due the Contractor until said claims have been fully and completely discharged or otherwise satisfied.

8.9 STATE'S RIGHT TO OFFSET. The STATE may offset against any monies or other obligations the STATE owes to the CONTRACTOR under this Contract, any amounts owed to the State of Hawaii by the CONTRACTOR under this Contract or any other Contracts or pursuant to any law or other obligation owed to the State of Hawaii by the CONTRACTOR, including, without limitation, the payment of any taxes or levies of any kind or nature. The STATE will notify the CONTRACTOR in writing of any offset and the nature of such offset. For purposes of this Subsection, amounts owed to the State of Hawaii shall not include debts or obligations which have been liquidated, agreed to by the CONTRACTOR, and are covered by an installment payment or other settlement plan approved by the State of Hawaii, provided, however, that the CONTRACTOR shall be entitled to such exclusion only to the extent that the CONTRACTOR is current with, and not delinquent on, any payments or obligations owed to the State of Hawaii under such payment or other settlement plan.

~END OF ARTICLE 8~